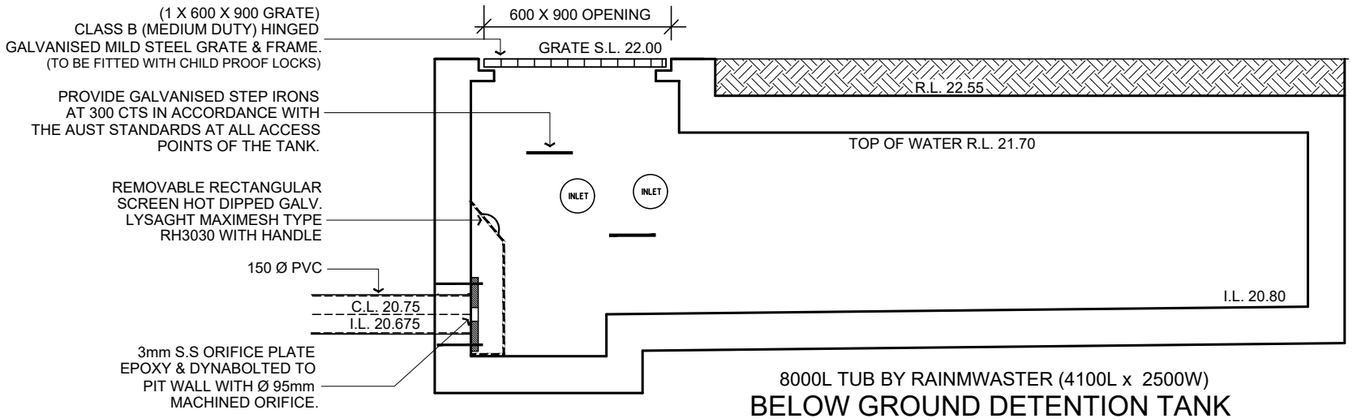

8000L TUB BY RAINMWASTER (4100L x 2500W)

BELOW GROUND DETENTION TANK

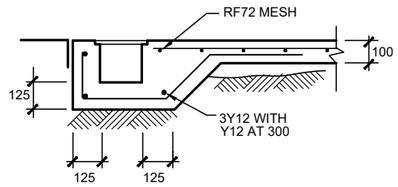

GRATED DRAIN

NOTE, ALL PIT SIZES SHOWN ON PLAN
REFLECT THE REQUIRED GRATE DIMENSION

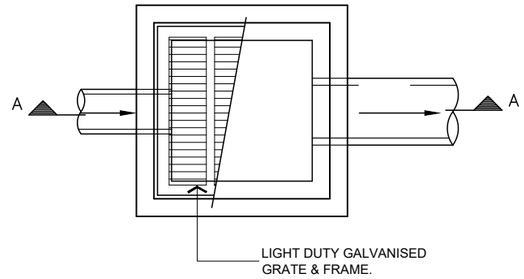

TYPICAL PIT DETAIL

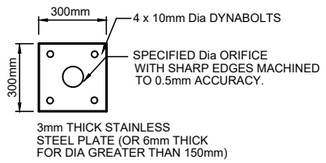

ORIFICE PLATE DETAIL

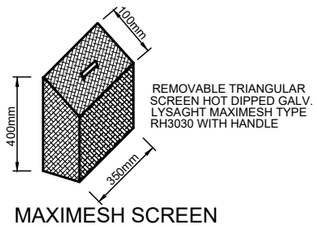

MAXIMESH SCREEN

DANGER

CONFINED SPACE
NO ENTRY WITHOUT
CONFINED SPACE
TRAINING

TO BE PLACED AT ALL

IN TRAFFICABLE AREAS	IN NON-TRAFFICABLE AREAS
BRICKWORK/BLOCKWORK WALLS OR PRECAST CONCRETE PITS MAY BE USED SUBJECT TO APPROVAL	FIBRE-GLASS OR HARD-PLASTIC PITS MAY BE USED SUBJECT TO APPROVAL

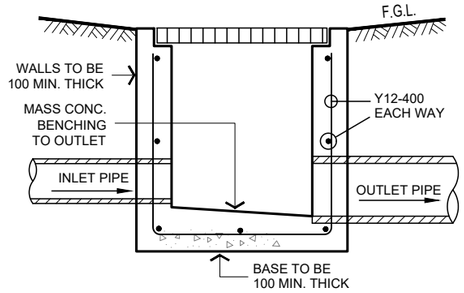

TYPICAL SECTION A

ENSURE ALL CONNECTIONS WITHIN CHARGED SYSTEM ARE SOLVENT WELDED

ALL DOWNPIPES ARE TO BE ENTIRELY PVC. PIPES ARE TO BE SEALED UPTO U/S OF ROOF GUTTERS

ROOF GUTTERS I.L. 28.91
TANK INLET I.L. 26.77
HEAD PRESSURE - 2140mm

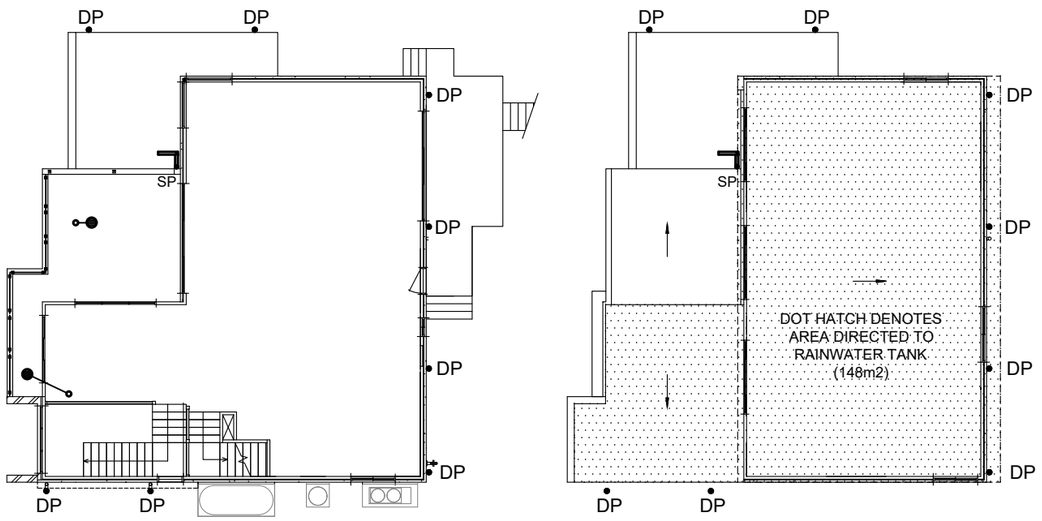

LYSAGHT FLATBACK 150 NSW UNSLOTTED; AREA = 6914 SQ.MM

ALL DOWNPIPES TO BE 90 Ø MIN

ROOF & FIRST FLOOR LAYOUT

SCALE 1:200/A3

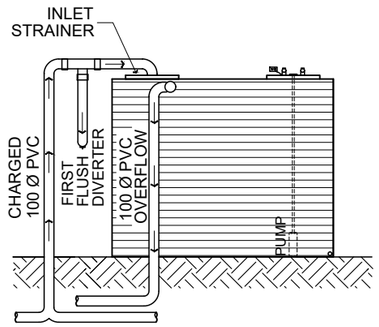

EVOLUTION MkIII RAINWATER TANK CONFIGURATION BY KINGSPAN

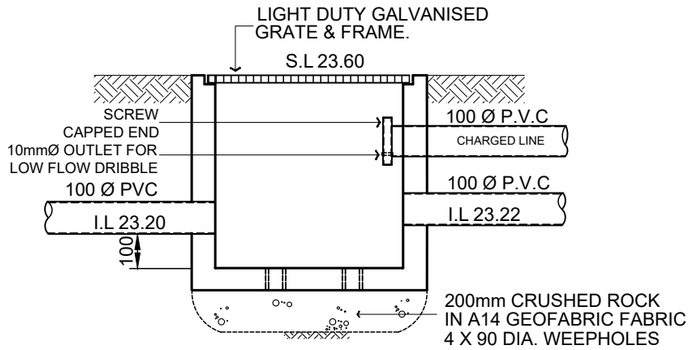

PIT CO1 - 350x350

CLEAN-OUT PIT
FOR CHARGED LINE SYSTEMS

STORMWATER LAYOUT NOTES

1) PITS DEEPER THAN 600mm TO BE 600 X 900 W, ELSE 375 SQ U.N.O.
2) ALL PIPES TO HAVE 1% MIN. GRADE U.N.O.
3) ALL DOWNPIPES TO BE 100 X 50 BOX or 90 Ø.
4) PIPES TO BE U.P.V.C. OR STORMWATER PIPE TO A.S.1254.
5) PITS TO BE STANDARD PRECAST CONCRETE PITS OR BRICK RENDERED WITH CONCRETE HEAVY DUTY GRATES SIZED AS PITS PER PLAN.
6) NO SEWER VENTS, GULLY PITS OR SIMILAR TO BE LOCATED BELOW THE MAXIMUM WATER SURFACE LEVEL IN DETENTION BASINS.
7) PERSONS UTILISING THIS PLAN FOR ANY PURPOSES SHALL VERIFY THE DATUM & RESPECTIVE LEVELS PRIOR TO COMMENCING ANY WORKS & NOTIFY THE ENGINEER OF ANY DISCREPANCIES.
8) DRIVEWAY LEVELS PROVIDED FOR DRAINAGE DESIGN PURPOSES ONLY. LEVELS MAY BE ADJUSTED TO SUIT FINAL HOUSE CUT/FILL CONDITIONS BUT NEED TO MAINTAIN INTENT OF DRAINAGE SYSTEM. ENGINEER TO BE CONSULTED PRIOR TO CONSTRUCTION TO ENSURE INTENT MAINTAINED.
9) END OF EXISTING DRAINAGE LINE TO BE EXPOSED & LEVELS CONFIRMED BY BUILDER PRIOR TO COMMENCEMENT OF WORKS.
10) BUILDERS TO ENSURE SERVICES CONNECTIONS TO HOUSE DO NOT CONFLICT WITH DRAINAGE DESIGN REQUIREMENTS.
11) ALL WORKS TO BE CONSTRUCTED TO GOOD BUILDING PRACTICE & MATERIALS TO MEET ACCEPTED SPECIFICATIONS.

LEGEND

P1	PIT LABEL	G.F.L.	GARAGE FLOOR LEVEL
	SUMP PIT - PIT SIZE REFERS TO GRATE DIMENSIONS	* 0.00	EXISTING REDUCED LEVEL
	300x300 FLOOR GULLY	• R.L 157.00	PROPOSED REDUCED LEVEL
	100/150 Ø GARDEN GULLY	DP	DOWNPIPE
	DRAINAGE PIPE	SP	SPITTER/SPREADER
	AERIAL PIPE		CLEANING EYE
S.L.	SURFACE LEVEL		SEDIMENT FENCE
I.L.	INVERT LEVEL	AG	AG LINE
F.F.L.	FINISHED FLOOR LEVEL		OVERLAND FLOW

alwdesign
CIVIL ENGINEERING CONSULTANTS
P: 02 9802 5509 E: admin@alwdesign.com.au
M: 0413 763 432 69 DELANGE ROAD, PUTNEY NSW 2112

JOB NUMBER: SW25135
DRAWING NUMBER: SW25135 - S1

PROJECT: PROPOSED RESIDENTIAL DWELLING AT LOTS 34+35, # 231-233 MCCARRS CREEK RD, CHURCH POINT NSW
DRAWING: SITE STORMWATER MANAGEMENT LAYOUT

DESIGNED	DRAWN	CHECKED:
A.W	N.W	ANDREW L WAHBE - BE (CIVIL) MIEAUST PENG

DRAWINGS NOT TO BE USED FOR CONSTRUCTION UNLESS SIGNED BY DESIGNING ENGINEER

ISSUE	REVISION DESCRIPTION	APPR. DATE
A	ISSUED FOR DEVELOPMENT APPLICATION	09/05/25

DCP
S.L 22.00
C.L 20.75
I.L 20.675
600x900

LENGTH	= 3900mm
WIDTH	= 2200mm
AVERAGE DEPTH	= 932mm
VOLUME STORED	= 8.00 m3

NOTE, SUB-SOIL DRAINAGE TO BE DETAILED AT CONSTRUCTION CERTIFICATE STAGE

PIT P1
S.L 24.80
I.L 24.40
350x350

BELOW GROUND DETENTION TANK
SHOWN HATCHED

MAX POOL RL	= 21.70
MAX DEPTH	= 950mm
VOLUME STORED	= 8.00 m3
VOLUME REQUIRED	= 6.60 m3

DRAINAGE REQUIREMENT TO W.C POLICY

SITE AREA	= 734 m2
SITE COVERAGE AREA	= 246 m2
SITE COVERAGE	= 43 %

ON-SITE DETENTION IS REQUIRED

AREA ROUTED THROUGH OSD	
IMPERVIOUS AREA	= 181 m2
PERVIOUS AREA	= 210 m2
AREA BYPASSING OSD	
IMPERVIOUS AREA	= 65 m2
PERVIOUS AREA	= 278 m2
OSD VOLUME REQUIRED	= 6.60 m3
RAINWATER TANK (PER BASIX)	= 3.00 m3
OSD TANK VOLUME STORAGE	= 8.00 m3
TOTAL VOLUME STORAGE	= 11.0 m3
PRE-DEVELOPED DISCHARGE	= 33.0 L/s
PROPOSED ST.STEEL ORIFICE Ø	= 95 mm
LIMITED DISCHARGE THRU OSD	= 15.0 L/s
UNCONTROLLED FLOW	= 18.0 L/s

OSD PARAMATERS DETERMINED WITH 'DRAINS'. FILE IS AVAILABLE FOR REVIEW. EMAIL REQUESTED TO: admin@alwdesign.com.au

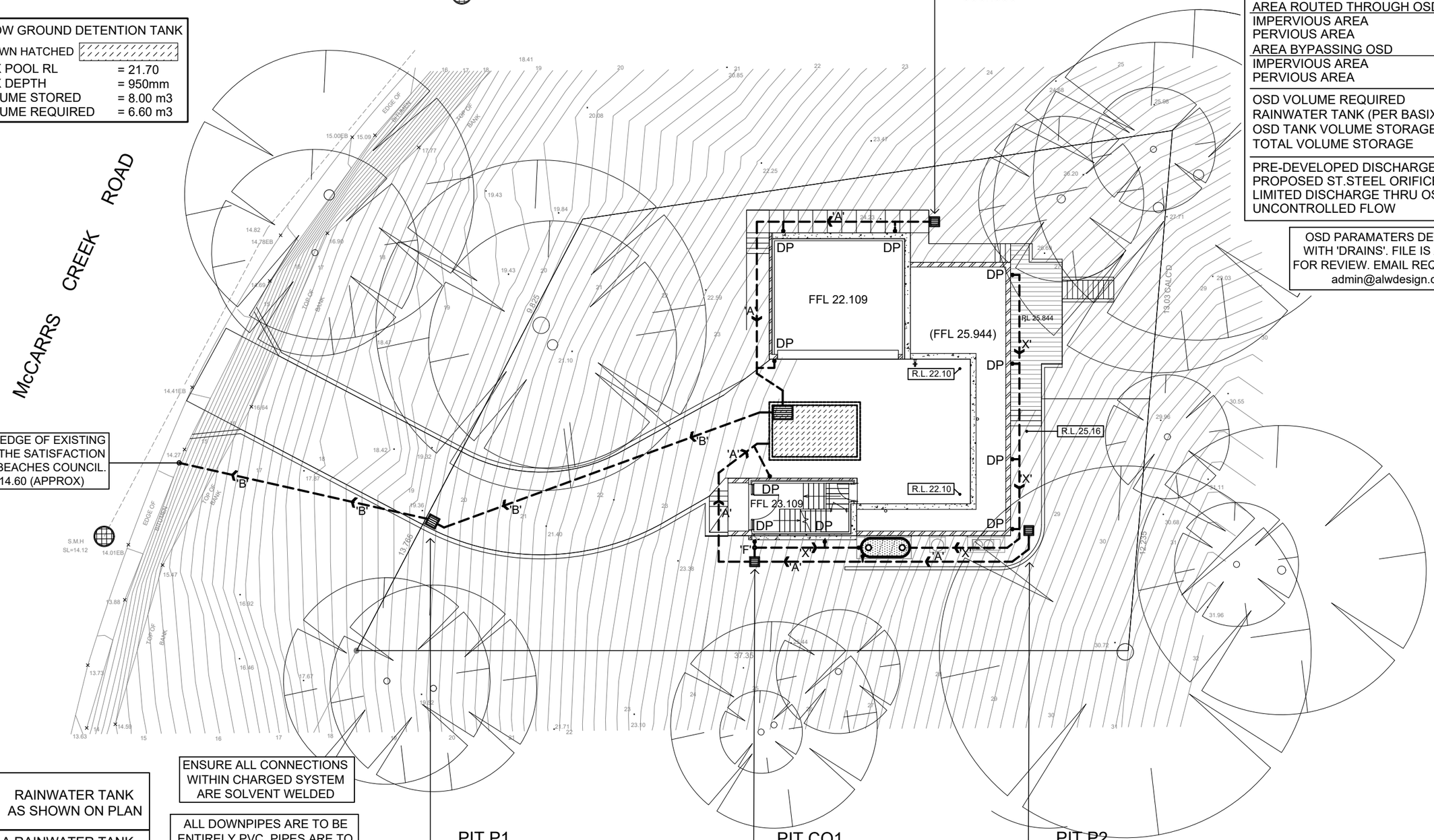

DISCHARGE TO EDGE OF EXISTING DISH DRAIN TO THE SATISFACTION OF NORTHERN BEACHES COUNCIL. OUTLET I.L. 14.60 (APPROX)

ENSURE ALL CONNECTIONS WITHIN CHARGED SYSTEM ARE SOLVENT WELDED

ALL DOWNPIPES ARE TO BE ENTIRELY PVC. PIPES ARE TO BE SEALED UPTO U/S OF ROOF GUTTERS

ROOF GUTTERS I.L. 28.91
TANK INLET I.L. 26.77
HEAD PRESSURE - 2140mm

RAINWATER TANK AS SHOWN ON PLAN

PROVIDE A RAINWATER TANK 3000L IN CAPACITY TO SUIT ALL BASIX REQUIREMENTS. TANK TO BE CONNECTED AS SPECIFIED IN BASIX REPORT.

PIT P1
S.L 19.60
I.L 19.20
450x450

PIT CO1
S.L 23.60
I.L 23.20
350x350

PIT P2
S.L 25.10
I.L 24.70
350x350

SITE STORMWATER MANAGEMENT LAYOUT

SCALE 1:200/A3

PIPE SCHEDULE

TAG	SIZE	MATERIAL	GRADE	DESCRIPTION
'A'	100 Ø	P.V.C	1% MIN	REGULAR GRAVITY PIPE
'B'	150 Ø	P.V.C	1% MIN	REGULAR GRAVITY PIPE
'X'	100 Ø	P.V.C	CHARGED	TO FEED RAINWATER TANK
'F'	100 Ø	P.V.C	1% MIN	FLUSHING LINE - CAPPED END

alwdesign
CIVIL ENGINEERING CONSULTANTS
P: 02 9802 5509 E: admin@alwdesign.com.au
M: 0413 763 432 69 DELANGE ROAD, PUTNEY NSW 2112

JOB NUMBER: SW25135
DRAWING NUMBER: SW25135 - S2

PROJECT: PROPOSED RESIDENTIAL DWELLING AT LOTS 34+35, # 231-233 MCCARRS CREEK RD, CHURCH POINT NSW
DRAWING: ROOF LAYOUT & GENERAL DETAILS

DESIGNED	DRAWN	CHECKED:
A.W	N.W	ANDREW L WAHBE - BE (CIVIL) MIEAUST PENG

DRAWINGS NOT TO BE USED FOR CONSTRUCTION UNLESS SIGNED BY DESIGNING ENGINEER.

ISSUE	REVISION DESCRIPTION	APPR. DATE
A	ISSUED FOR DEVELOPMENT APPLICATION	09/05/25