DRAWING/DOCUMENT DESCRIPTION	DRAWING NUMBER	SHEET NO.	ISSUE NO.	ISSUE DATE	DRAWING STATUS				
					CANCELLED	PRELIMINARY	FOR CONSTRUCTION	AS BUILT	REFERENCE ONLY
SITE SPECIFIC NOTES	N745783	S0	0.1	18.05.21			✓		
SITE LAYOUT AND ACCESS	N745783	S1	0.1	18.05.21			✓		
SITE LAYOUT PLAN	N745783	S1-1	0.2	18.05.21			✓		
SITE LAYOUT PLAN	N745783	S1-2	0.2	18.05.21			✓		
SITE LAYOUT PLAN	N745783	S1-3	0.2	18.05.21			✓		
SITE SETOUT PLAN	N745783	S1-4	0.2	18.05.21			✓		
(N,S,E,W) ELEVATION	N745783	S3	0.1	18.05.21			✓		
LINE OF SITE PHOTO	N745783	S4	0.1	18.05.21			✓		
SITE EARTHING - OPTION 4	N745783	G4	0.1	18.05.21			✓		
SAN EARTHING SCENARIO	N745783	G4-4	0.1	18.05.21			✓		
TRENCH DETAILS	N745783	G4-4	0.1	18.05.21			✓		
AC POWER CONNECTION	N745783	E2	0.1	18.05.21			✓		
CONCRETE FOUNDATION DETAILS	N745783	T2	0.2	18.05.21			✓		
EQUIPMENT PLATFORM - H-FRAME DETAIL	N745783	T2-1	0.1	18.05.21			✓		
COMPOUND FENCE AND GATE DETAILS	N745783	T8	0.1	18.05.21			✓		

Telstra

OXFORD FALLS - SYDNEY ITC

Address ID NSW 116351 OXFS

ADDRESS: OXFORD FALLS RD
OXFORD FALLS
NSW 2100

DRAWING ENDORSEMENT BY CLIENT			
NAME		DATE	
SIGNATURE		STATUS	

VENTIA REVISION TABLE		PWID: OXFS			SCALE :	
CP 20004549	SP 30092220 WO 009				DATE	18.05.21
					DESIGN BY	H. DESAI
					DRAWN BY	A. HICKS
					CHECKED	H. DESAI
18.05.21	FOR CONSTRUCTION	A.H	H.D.	A	APPROVED	H. DESAI
DATE	DESC	DRN	APP	REV	CUST APPR.	J.SCROGGIE

FOR CONSTRUCTION

ORDER	DRAWN	CHKD	AMENDMENT	EXAM	APPD	DATE	ISS
	AH	HD	EXCHANGE SATELLITE INSTALLATION	HD	HD	18.05.21	0.1

© Telstra Corporation Limited ABN 33 051 775 556 All rights reserved.

Telstra

SATELLITE ACCESS NODE SITE 69557
OXFORD FALLS - SYDNEY ITC
DRAWING INDEX AND DOCUMENT CONTROL
OXFORD FALLS RD, OXFORD FALLS

DWG NO. N745783 SHT NO. DC

Cad file: 30092220 Version 0 OXFORD FALLS - SYDNEY ITC Rev A.dwg

A3

Plot date: 19 May 2021 - 10:20 AM
Telstra Networks Wireless Program Delivery Template - 017866P02 issue 12 11.04/2016
The copyright and ownership of this drawing is assigned to Telstra and must not be copied or saved elsewhere without written permission from Telstra.

SITE SPECIFIC NOTES

EQUIPMENT PLATFORM

TYPE: PROPOSED STEEL 'MOON' PLATFORM.
SIZE (mm): APPROX. 915 x 1200mm.
BASE TYPE: STEEL BASE PLATE

EARTHING

REQUIREMENT FOR EARTH NETWORK WITHIN SAN COMPOUND PLUS AN INTERCONNECTION FROM SAN TO THE TELSTRA ACTIVE EARTH.
REFER TO SHEET G4 FOR SITE SPECIFIC EARTHING DETAILS AND EARTHING GUIDELINES.

ENVIRONMENTAL ISSUES

REFER TO ENVIRONMENTAL RISK ASSESSMENT CHECKLIST 018422f10 INCLUDE ANY ANIMALS:
NESTING BIRDS: OSPREY ETC.
DANGEROUS SNAKES, WASPS & SPIDERS ETC.
MENACING CATTLE ETC.

POWER SUPPLY

32A/1P SUPPLY SHALL BE TAKEN FROM EXISTING EXCHANGE MAIN SWITCHBOARD. PROPOSED SUPPLY AND TAKE OFF POINT SHALL BE CONFIRMED WITH RELEVANT TELSTRA STAKEHOLDERS PRIOR TO ANY CONSTRUCTION WORKS.

DIAL 1100 BEFORE YOU DIG.

PROPERTY SIGNAGE

SPECIFY PROPERTY SIGNAGE AS PER DOCUMENT 017866A12.
PROPERTY SIGN INCLUDES RFNSA SITE NUMBER.
SITE NAME: BRANDED SITE IDENTIFICATION REGULAR (BSr).
TELSTRA S/I NUMBER 187/00929.
JABAC PART NUMBER TFMS929-M.

SITE ACCESS

VIA OXFORD FALLS RD
REFER TO SHEET S1
SITE S.A.C. TO ADVISE C.D.C. LOCATION DETAILS

SITE SIGNAGE

ALL EME SIGNAGE IS REFERENCED ON DRAWINGS S1 & S3.
REFER TO DOCUMENT 005486 FOR DETAILS.

WORKPLACE HEALTH & SAFETY

ASBESTOS CONTAINING MATERIALS WERE IDENTIFIED DURING INSPECTION & DESIGN STAGES, SUBSEQUENTLY CONFIRMED BY REVIEW OF THE TELSTRA REGISTER OF ASBESTOS MATERIALS. ALL NECESSARY CONTROLS WILL NEED TO BE IN PLACE DURING THE CONSTRUCTION PHASE TO CONTROL THIS IDENTIFIED HAZARD.

GENERAL NOTES

1. ALL DIMENSIONS ARE IN MILLIMETRES UNLESS SPECIFIED OTHERWISE.
2. BIRD PROOFING - CABLES AND ALL ACCESS POINTS ON THE STRUCTURE MUST BE BIRD PROOFED IN ACCORDANCE WITH THE METHODS SPECIFIED IN DOCUMENT NO. 003615 EXTERNAL PLANT STANDARDS FOR MOBILE BASE STATIONS, SECTION 6.3.3. FOR QUEENSLAND, ALL FEEDERS ARE TO BE BIRD PROOFED WHEN INSTALLED.
3. SERVICES, WHERE SHOWN ARE INDICATIVELY ONLY. LOCATION OF ALL RELEVANT EXISTING SERVICES SHALL BE IDENTIFIED AND CONFIRMED PRIOR TO COMMENCING WORK. THE CONTRACTOR TO LIAISE WITH RELEVANT AUTHORITIES FOR DIRECTIONS AND PERMITS REQUIRED.
   DIAL BEFORE YOU DIG 1100.
4. CONSTRUCTORS ARE TO BE AWARE OF TELSTRA DOCUMENT 007338-C8-11 AND IN PARTICULAR CLAUSE 7.3 & 10.3 WHICH DESCRIBES REQUIREMENTS PERSONNEL MUST UNDERTAKE IN RESPECT TO ASBESTOS MANAGEMENT AT TELSTRA FACILITIES.
5. PROPRIETARY PRODUCTS SHALL BE INSTALLED IN ACCORDANCE WITH MANUFACTURERS SPECIFICATIONS.
6. COMPOUND SHALL BE ORIENTATED TO SUIT SITE-SPECIFIC REQUIREMENTS & ANTENNA AZIMUTH. REFER TO SITE-SPECIFIC COMPOUND LAYOUT DRAWING.
7. COMPOUND SHALL BE STRIPPED OF ALL VEGETATION & TOPSOIL. COMPOUND SHALL BE FINISHED WITH A LAYER OF GEOTEXTILE UNDERLYING MIN. 100mm LAYER OF COMPACTED ROADBASE OR 20mm AGGREGATE.

SITE REFERENCE DETAILS

OCCUPIER	SITE NAME	SITE CODE
TELSTRA	OXFORD FALLS - SYDNEY ITC	OXFS
RFNSA SITE NUMBER - N/A STRUCTURE OWNER - TELSTRA		

SERVICES LEGEND

F	OPTICAL FIBRE ABOVE GROUND
F	OPTICAL FIBRE BELOW GROUND
P	ABOVE GROUND ELECTRICAL SUPPLY
P	BELOW GROUND ELECTRICAL SUPPLY
G	GAS SUPPLY BELOW GROUND
HV	HIGH VOLTAGE ELECTRICAL SUPPLY
W	WATER SUPPLY ABOVE GROUND
W	WATER SUPPLY BELOW GROUND
S	SEWER LINE
SW	STORM WATER
FE	ABOVE GROUND FEEDER CABLES
FE	BELOW GROUND FEEDER CABLES
EA	EARTH STRAP
E	ABOVE GROUND 35mm EARTH
E	BELOW GROUND 35mm EARTH

1 A1 — EXISTING TELSTRA ANTENNA SECTOR

1 A1 — PROPOSED TELSTRA ANTENNA SECTOR

FOR CONSTRUCTION

TO BE READ IN CONJUNCTION WITH SHEETS S1, S1-1, S1-2, S1-3, S1-4 & S3.

ORDER	DRAWN	CHKD	AMENDMENT	EXAM	APPD	DATE	ISS
	AH	HD	EXCHANGE SATELLITE INSTALLATION	HD	HD	18.05.21	0.1

COMPLIANCE BOX
COMPLETED AS PER DESIGN ☐
ALTERATIONS IN RED ☐
NAME (PRINT)
SIGNATURE DATE

Telstra

SATELLITE ACCESS NODE SITE 69557
OXFORD FALLS - SYDNEY ITC
SITE SPECIFIC NOTES
OXFORD FALLS RD, OXFORD FALLS

DWG NO. N745783 SHT NO. S0

© Telstra Corporation Limited ABN 33 051 775 556 All rights reserved.

Cad file: 30092220 WO009 OXFORD FALLS - SYDNEY A3 Rev A.dwg

The copyright and ownership of this drawing is assigned to Telstra and must not be copied or saved elsewhere without written permission from Telstra.

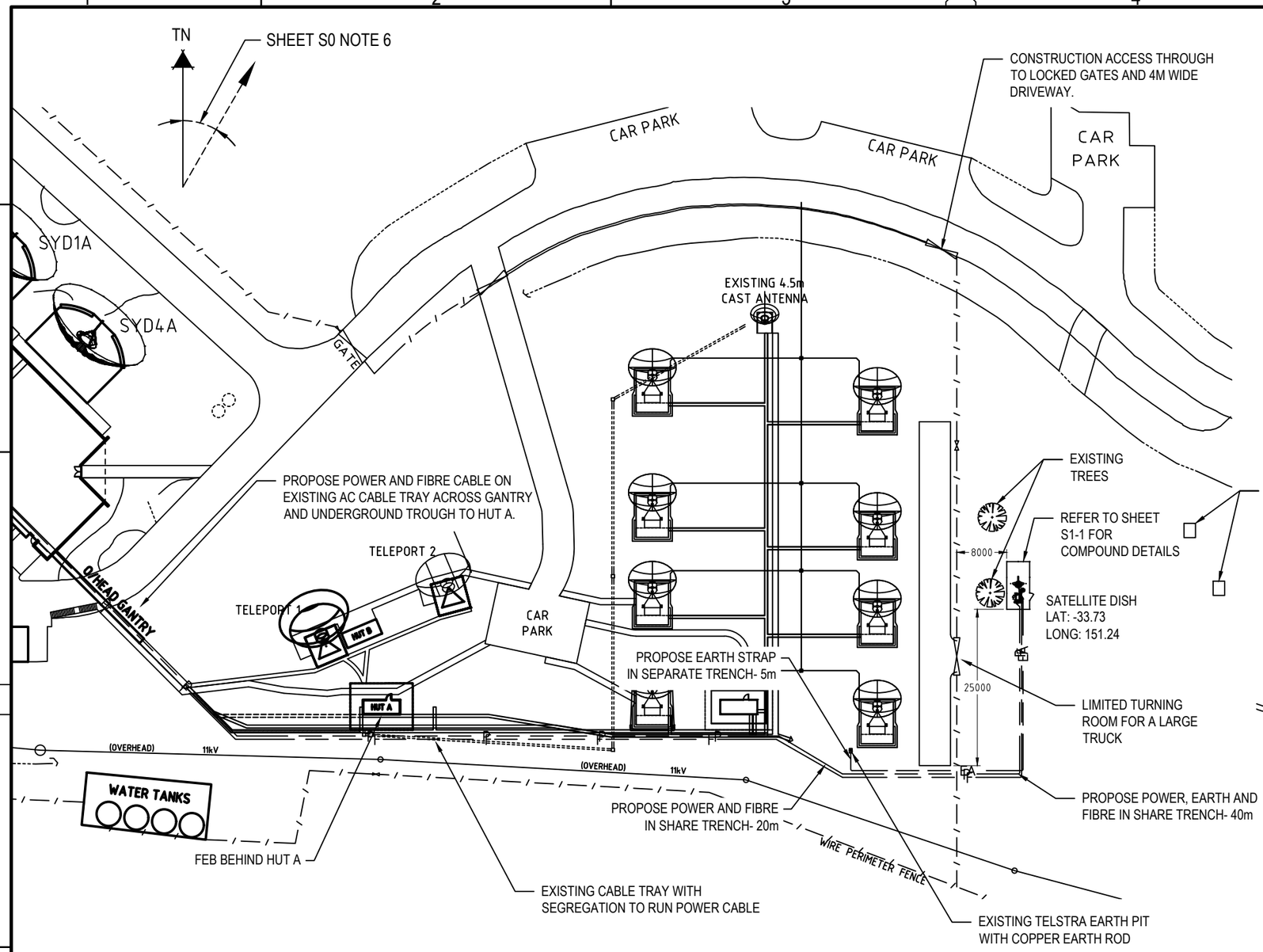

SITE LAYOUT

SCALE 1:800

8m 0 8m 16m 24m 32m 40m SCALE 1:800

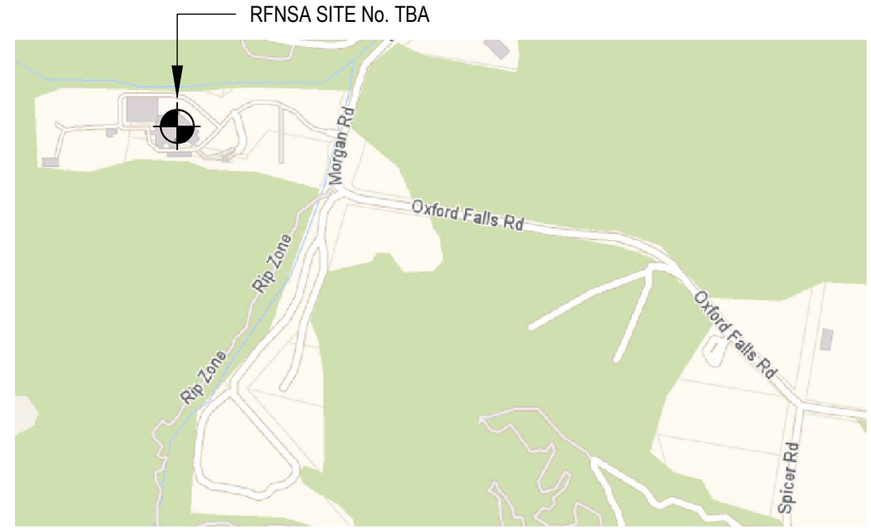

Copyright © Whereis Registered Trademark of Sensis Pty Ltd.

LOCALITY PLAN

NOT TO SCALE

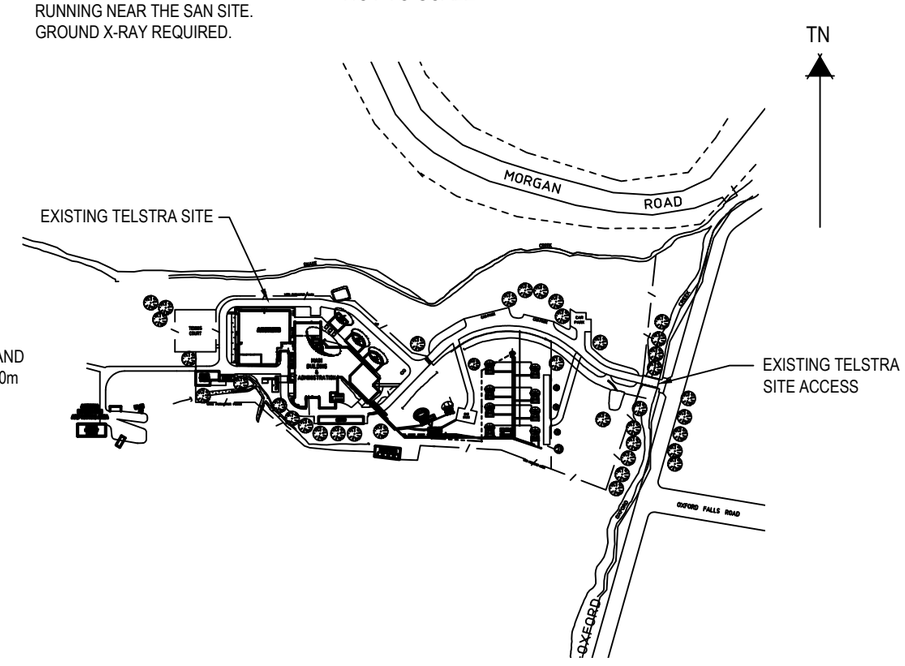

SCALE 1:5000

50m 0 50m 100m 150m 200m 250m SCALE 1:5000

NOTES :

1. FOR SITE SPECIFIC NOTES REFER TO SHEETS S0 & S0-1.
2. FOR EME SIGNS NOTED AS #X REFER TO 005486 DOCUMENTS FOR DETAILS.
3. ALL DIMENSIONS ARE IN MILLIMETRES UNLESS OTHERWISE STATED.

TO BE READ IN CONJUNCTION WITH SHEETS S1-1, S1-2, S1-3, S1-4 & S3.

FOR CONSTRUCTION

SITE STRUCTURE CO-ORDINATES (GDA94) GPS READING ACCURACY: ±xxm CENTRE OF MAST/POLE/TOWER	
LATITUDE	-33.73° (GDA94)
LONGITUDE	151.24° (GDA94)

COMPLIANCE BOX
COMPLETED AS PER DESIGN ☐
ALTERATIONS IN RED ☐
NAME (PRINT)
SIGNATURE DATE

ORDER	DRAWN	CHKD	AMENDMENT	EXAM	APPD	DATE	ISS
	AH	HD	EXCHANGE SATELLITE INSTALLATION	HD	HD	18.05.21	0.1

© Telstra Corporation Limited ABN 33 051 775 556 All rights reserved.

Telstra

SATELLITE ACCESS NODE SITE 116351
OXFORD FALLS RD, OXFORD FALLS

SITE LAYOUT AND ACCESS
OXFORD FALLS RD, OXFORD FALLS

DWG NO. N745783 SHT NO. S1

Cad file: 30092220 WO009 OXFORD FALLS - SYDNEY.dwg

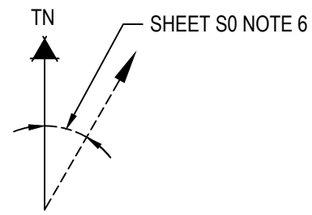

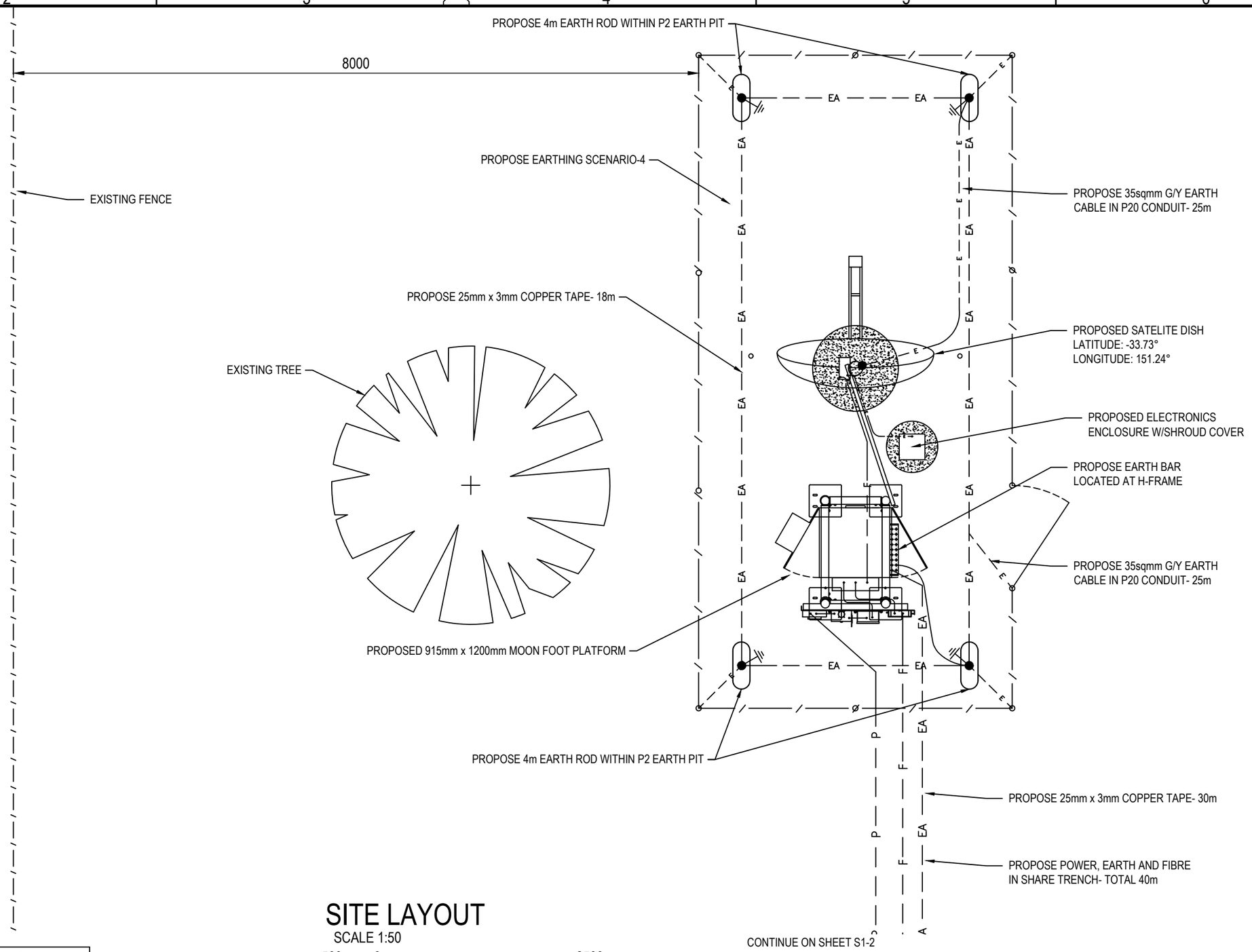

SITE LAYOUT

SCALE 1:50

500 0 2500 SCALE 1:50

TO BE READ IN CONJUNCTION WITH SHEETS S1, S1-2, S1-3, S-4 & S3.

POWER AND COMMUNICATION CONDUIT DETAILS				
ITEM	SEPERATE TRENCH (m)	SHARE TRENCH-WHITE (m)	EXISTING CABLE TRAY (m)	TOTAL (m)
P100 POWER CONDUIT	60m	N/A	220m	280m
P50 COMMUNICATION CONDUIT	N/A	60m	280m	340m

EARTHING DETAILS			
ITEM	SEPERATE TRENCH (m)	SHARE TRENCH-WHITE (m)	TOTAL (m)
25 x 3mm COPPER TAPE	23m	40m	63m
35sqmm G/Y IN P20 FLEXIBLE CONDUIT	17m	N/A	17m

COMPLIANCE BOX
COMPLETED AS PER DESIGN ☐
ALTERATIONS IN RED ☐
NAME (PRINT)
SIGNATURE DATE

ORDER	DRAWN	CHKD	AMENDMENT	EXAM	APPD	DATE	ISS
	AH	HD	EXCHANGE SATELLITE INSTALLATION	HD	HD	18.05.21	0.1

© Telstra Corporation Limited ABN 33 051 775 556 All rights reserved.

FOR CONSTRUCTION

Telstra

SATELLITE ACCESS NODE SITE 116351
OXFORD FALLS - SYDNEY ITC
SITE LAYOUT PLAN
OXFORD FALLS RD, OXFORD FALLS

DWG NO. N745783 SHT NO. S1-1

Cad file: 30092220 WO009 OXFORD FALLS - SYDNEY.dwg

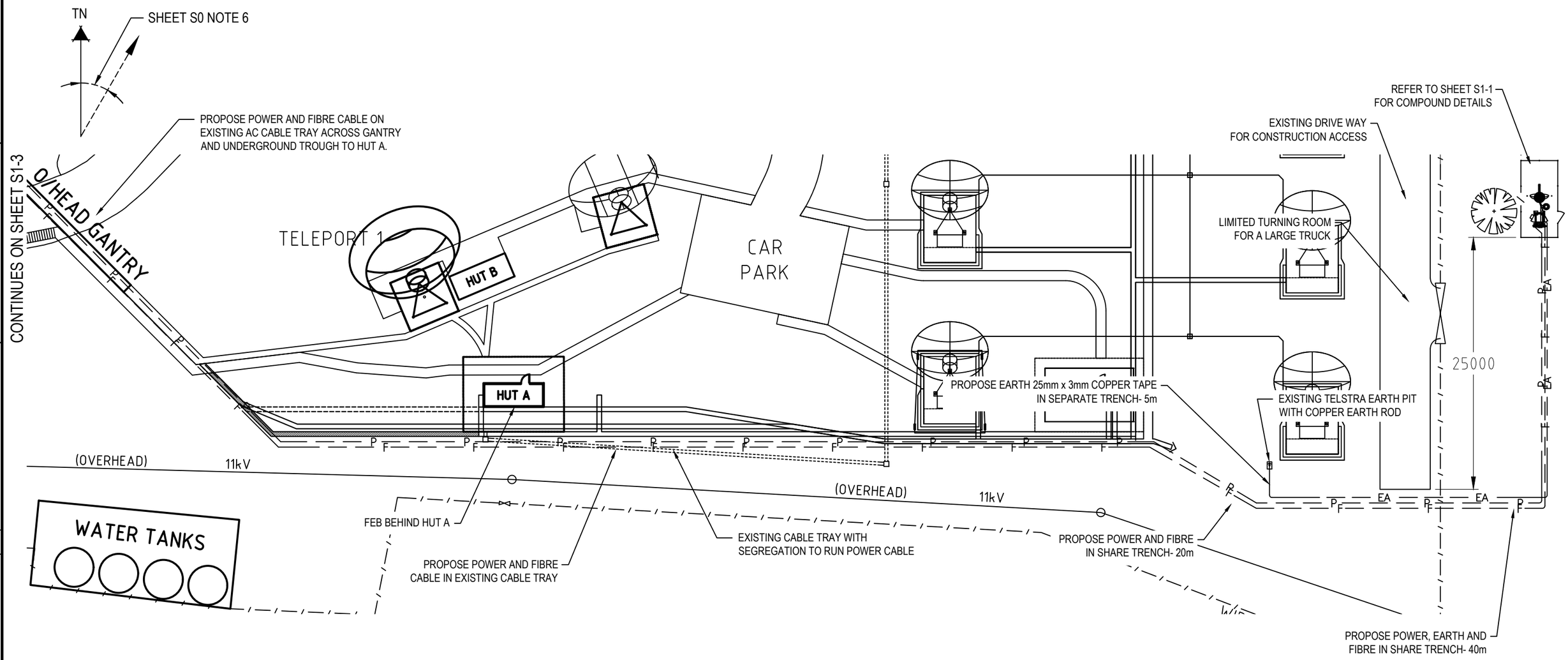

SITE LAYOUT

SCALE 1:400

4m 0 4m 8m 12m 16m 20m SCALE 1:400

POWER AND COMMUNICATION CONDUIT DETAILS				
ITEM	SEPERATE TRENCH (m)	SHARE TRENCH-WHITE (m)	EXISTING CABLE TRAY (m)	TOTAL (m)
P100 POWER CONDUIT	60m	N/A	220m	280m
P50 COMMUNICATION CONDUIT	N/A	60m	280m	340m

EARTHING DETAILS			
ITEM	SEPERATE TRENCH (m)	SHARE TRENCH-WHITE (m)	TOTAL (m)
25 x 3mm COPPER TAPE	23m	40m	63m
35sqmm G/Y IN P20 FLEXIBLE CONDUIT	17m	N/A	17m

COMPLIANCE BOX
COMPLETED AS PER DESIGN ☐
ALTERATIONS IN RED ☐
NAME (PRINT)
SIGNATURE DATE

TO BE READ IN CONJUNCTION WITH SHEETS S1, S1-2, S1-3, S1-4 & S3.

ORDER	DRAWN	CHKD	AMENDMENT	EXAM	APPD	DATE	ISS
	AH	HD	EXCHANGE SATELLITE INSTALLATION	HD	HD	18.05.21	0.1

© Telstra Corporation Limited ABN 33 051 775 556 All rights reserved.

FOR CONSTRUCTION

Telstra

SATELLITE ACCESS NODE SITE 116351
OXFORD FALLS - SYDNEY ITC
SITE LAYOUT PLAN
OXFORD FALLS RD, OXFORD FALLS

DWG NO. N745783 SHT NO. S1-2

Cad file: 30092220 WO009 OXFORD FALLS - SYDNEY.dwg

A3

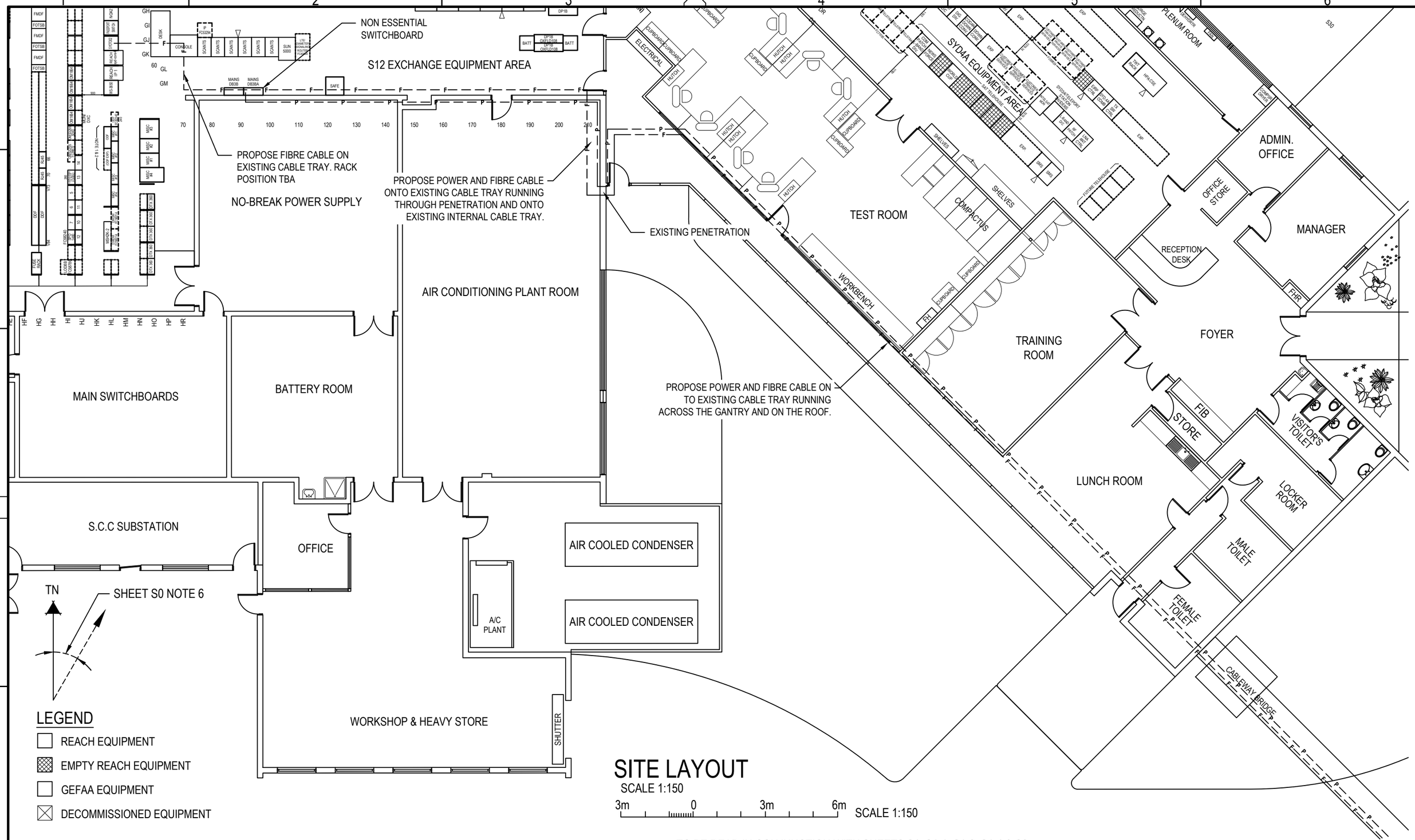

LEGEND

- REACH EQUIPMENT
- EMPTY REACH EQUIPMENT
- GEFAA EQUIPMENT
- DECOMMISSIONED EQUIPMENT

SITE LAYOUT

SCALE 1:150

3m 0 3m 6m SCALE 1:150

TO BE READ IN CONJUNCTION WITH SHEETS S1, S1-1, S1-2, S1-4 & S3.

CONTINUE ON SHEET S1-2

POWER AND COMMUNICATION CONDUIT DETAILS				
ITEM	SEPERATE TRENCH (m)	SHARE TRENCH-WHITE (m)	EXISTING CABLE TRAY (m)	TOTAL (m)
P100 POWER CONDUIT	60m	N/A	220m	280m
P50 COMMUNICATION CONDUIT	N/A	60m	280m	340m

EARTHING DETAILS			
ITEM	SEPERATE TRENCH (m)	SHARE TRENCH-WHITE (m)	TOTAL (m)
GALVANISED EARTH STRAP	23m	40m	63m
35sqmm G/Y IN P20 FLEXIBLE CONDUIT	17m	N/A	17m

FOR CONSTRUCTION

COMPLIANCE BOX
COMPLETED AS PER DESIGN ☐
ALTERATIONS IN RED ☐
NAME (PRINT)
SIGNATURE DATE

ORDER	DRAWN	CHKD	AMENDMENT	EXAM	APPD	DATE	ISS
	AH	HD	EXCHANGE SATELLITE INSTALLATION	HD	HD	18.05.21	0.1

© Telstra Corporation Limited ABN 33 051 775 556 All rights reserved.

Telstra

SATELLITE ACCESS NODE SITE 116351
OXFORD FALLS - SYDNEY ITC
SITE LAYOUT PLAN
OXFORD FALLS RD, OXFORD FALLS

DWG NO. N745783 SHT NO. S1-3

Cad file: 30092220 WO009 OXFORD FALLS - SYDNEY.dwg

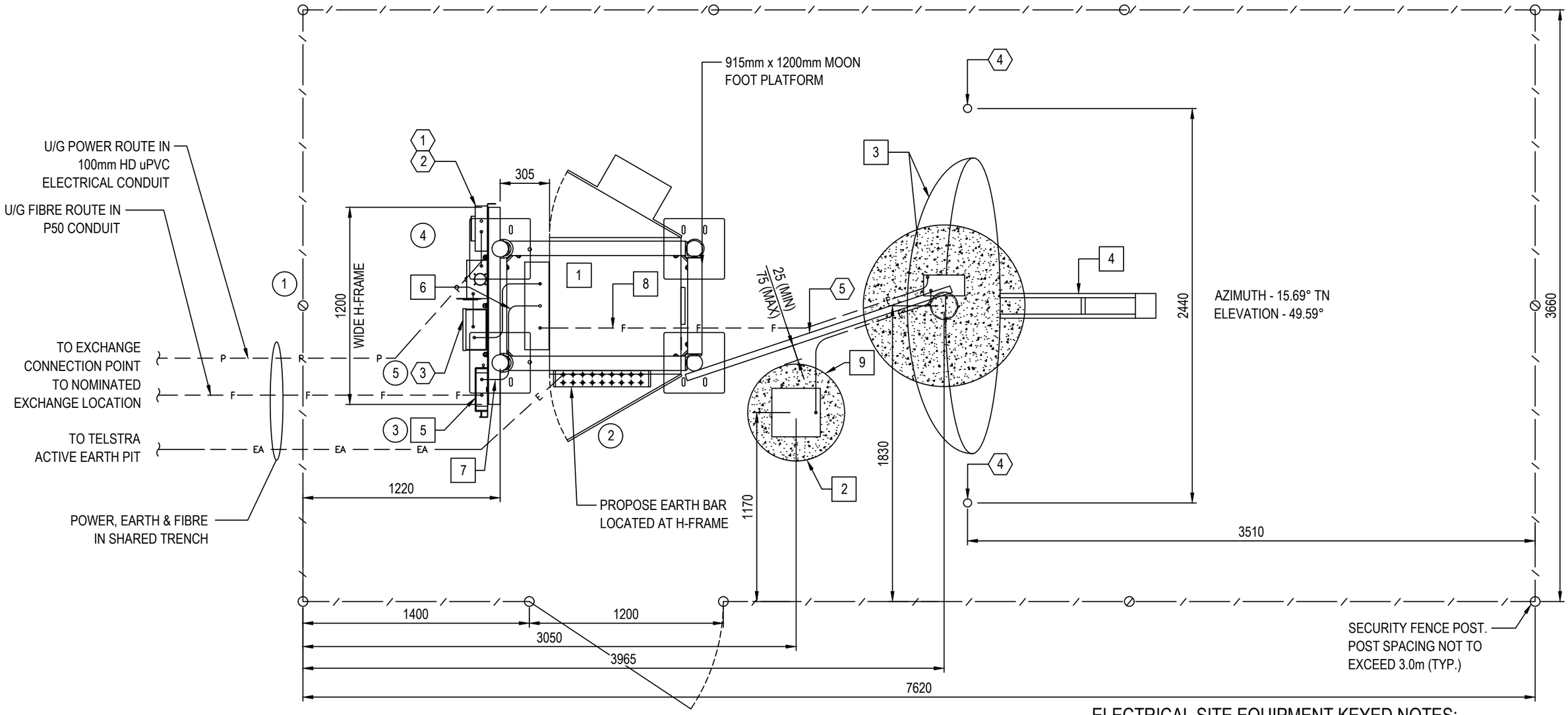

CLIENT EQUIPMENT KEYED NOTES:

1. OAN CABINET W/ EXTERNAL AC UNIT
2. ELECTRONICS ENCLOSURE W/ SHROUD COVER
3. 1.8m REFLECTOR W/ MODIFIED FEED BOOM & TRANSCEIVER
4. BOOM MOUNTED HP BUC
5. FIBRE INTERFACE PANEL
6. ACCESS NODE ASSEMBLY CABINET MFR. POWER CABLE
7. ACCESS NODE ASSEMBLY CABINET MFR. DATA CABLE
8. OAN CABINET MFR. AC/DC POWER CABLES MFR. DATA CABLES
9. ELECTRONICS ENCLOSURE MFR. DC POWER CABLES & MFR. DATA CABLES

SITE SETOUT PLAN

SCALE 1:25

500 0 500 1000 SCALE 1:25

ELECTRICAL SITE EQUIPMENT KEYED NOTES:

1. 100A UTILITY METER (IF REQUIRED)
2. SIZE OF THE ENCLOSURE SHALL SUIT THE POWER UTILITY REQUIREMENTS IN THE RELEVANT STATES AND TERRITORIES
3. 100A LOAD CENTRE BOX W/ EXTERNAL SURGE PROTECTION DEVICE
4. COTT WARNING MARKER (SUPPLIED BY CONTRACTOR)
5. (2) STACKED SECTIONS OF UNISTRUT FOR CABLE PATHWAY

NOTES :

1. REFER TO SHEET S0 FOR GENERAL NOTES.
2. COMPOUND SHALL BE STRIPPED OF ALL VEGETATION & TOPSOIL. COMPOUND SHALL BE FINISHED WITH A LAYER OF GEOTEXTILE UNDERLYING (WEED MATTING). MINIMUM 100mm LAYER OF COMPACTED ROADBASE OR 20mm AGGREGATE.

COMPLIANCE BOX
COMPLETED AS PER DESIGN ☐
ALTERATIONS IN RED ☐
NAME (PRINT)
SIGNATURE DATE

TO BE READ IN CONJUNCTION WITH SHEETS S1, S1-1, S1-2, S1-3 & S3.

ORDER	DRAWN	CHKD	AMENDMENT	EXAM	APPD	DATE	ISS
	AH	HD	EXCHANGE SATELLITE INSTALLATION	HD	HD	18.05.21	0.2

© Telstra Corporation Limited ABN 33 051 775 556 All rights reserved.

FOR CONSTRUCTION

Telstra

SATELLITE ACCESS NODE SITE 116351
OXFORD FALLS - SYDNEY ITC
SITE SETOUT PLAN
OXFORD FALLS RD, OXFORD FALLS

DWG NO. N745783 SHT NO. S1-4

A3

CLIENT EQUIPMENT KEYED NOTES:

1. OAN CABINET W/ EXTERNAL AC UNIT
2. ELECTRONICS ENCLOSURE W/ SHROUD COVER
3. 1.8m REFLECTOR W/ MODIFIED FEED BOOM & TRANSCEIVER
4. BOOM MOUNTED HP BUC
5. FIBRE INTERFACE PANEL
6. DISTRIBUTION BOARD
7. (2) ORANGE/WHITE DRIVEWAY MARKERS ATTACHED ONTO THE CABLE PATHWAY UNISTRUT SECTION TO SERVE AS TRIP HAZARD MARKERS. 1200mm LONG MARKER. ATTACH TO BOTH UNISTRUT SECTIONS WITH STAINLESS STEEL TIES. ONE MARKER ON EITHER SIDE OF EQUIPMENT ENCLOSURE PAD

TELSTRA ANTENNA CONFIGURATION TABLE

ANTENNA No	ANTENNA TYPE & SIZE H x W x D	ANTENNA ACTION REQUIRED	ANTENNA HEIGHT C/L A.G.L.	ANTENNA BEARING (x°T)	SECTOR NO. & TECHNOLOGY
A1	SATELLITE DISH ANTENNA SIZE 1800M DIA	INSTALL	1.8m	15.69° TN	BEAM ELEVATION 49.59° POINTING AT OPTUS D1 160° E

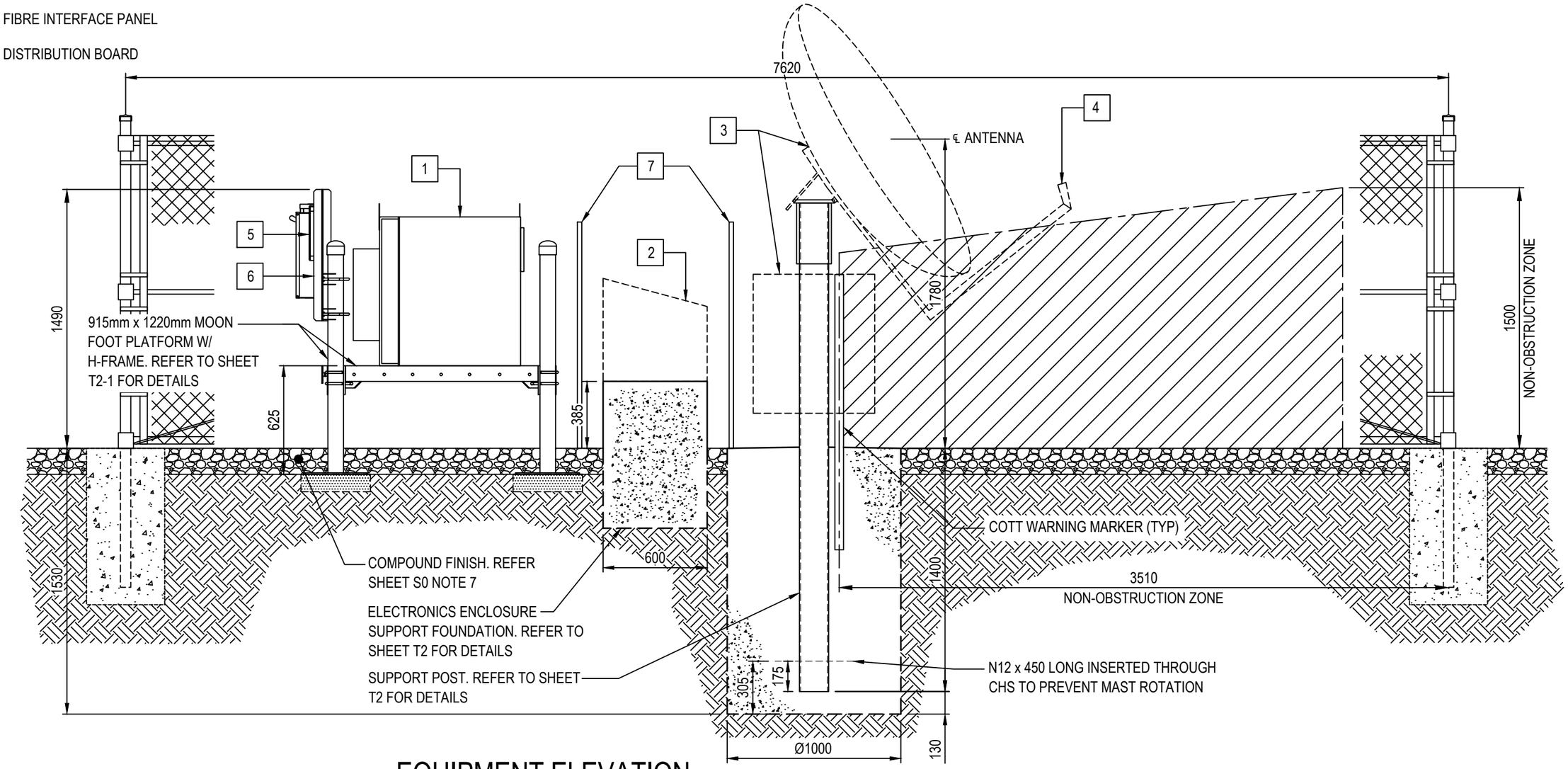

EQUIPMENT ELEVATION

SCALE 1:25

500 0 500 1000 SCALE 1:25

TO BE READ IN CONJUNCTION WITH SHEETS S1, S1-1 & S1-2.

FOR CONSTRUCTION

ORDER	DRAWN	CHKD	AMENDMENT	EXAM	APPD	DATE	ISS
	AH	HD	EXCHANGE SATELLITE INSTALLATION	HD	HD	18.05.21	0.1

NOTES :

1. FOR SITE SPECIFIC NOTES REFER TO SHEETS S0 & S0-1.
2. FOR EME SIGNS NOTED AS #X REFER TO 005486 DOCUMENTS FOR DETAILS.
3. ALL DIMENSIONS ARE IN MILLIMETRES UNLESS OTHERWISE STATED.

COMPLIANCE BOX

COMPLETED AS PER DESIGN ☐

ALTERATIONS IN RED ☐

NAME (PRINT)

SIGNATURE DATE

Telstra

SATELLITE ACCESS NODE SITE 116351
OXFORD FALLS - SYDNEY ITC
(N,S,E,W) ELEVATION
OXFORD FALLS RD, OXFORD FALLS

DWG NO. N745783 SHT NO. S3

© Telstra Corporation Limited ABN 33 051 775 556 All rights reserved.

Do Not Scale Drawing

Cad file: 30092220 WO009 OXFORD FALLS - SYDNEY A3 Rev A.dwg

Telstra Networks Wireless Program Delivery Template - 017866P02 Issue 12 11.04.2016

The copyright and ownership of this drawing is assigned to Telstra and must not be copied or saved elsewhere without written permission from Telstra.

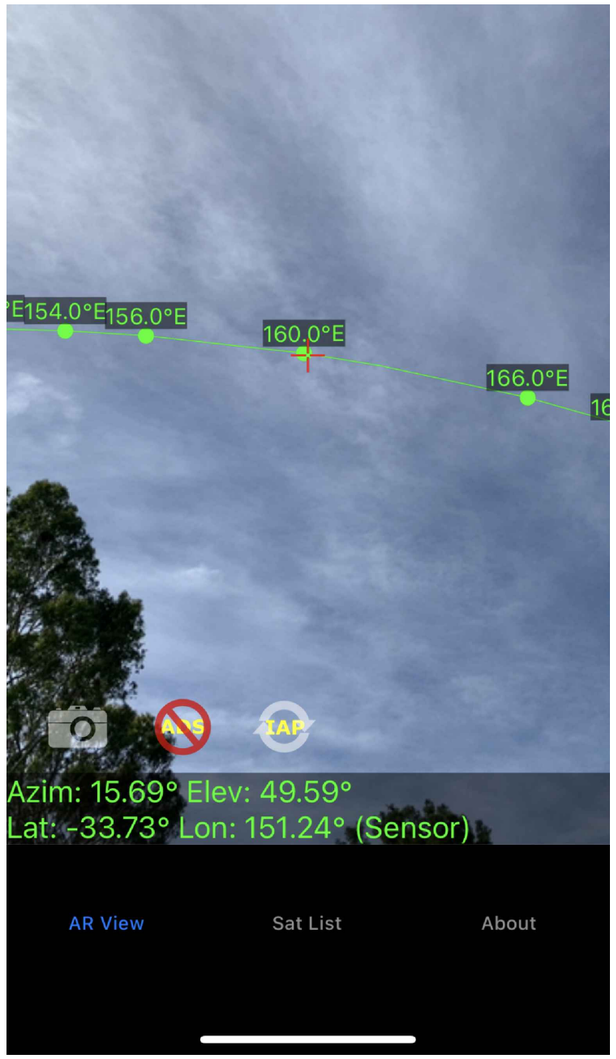

OXFORD FALLS - SYDNEY ITC
LINE OF SITE PHOTO

FOR CONSTRUCTION

ORDER	DRAWN	CHKD	AMENDMENT	EXAM	APPD	DATE	ISS
	AH	HD	EXCHANGE SATELLITE INSTALLATION	HD	HD	18.05.21	0.1

COMPLIANCE BOX
COMPLETED AS PER DESIGN ☐
ALTERATIONS IN RED ☐
NAME (PRINT)
SIGNATURE DATE

Telstra

SATELLITE ACCESS NODE SITE 116351
OXFORD FALLS - SYDNEY ITC
LINE OF SITE PHOTO PAGE
OXFORD FALLS RD, OXFORD FALLS

DWG NO. N745783 SHT NO. S4

© Telstra Corporation Limited ABN 33 051 775 556 All rights reserved.

Do Not Scale Drawing

Cad file: 30092220 WO009 OXFORD FALLS - SYDNEY A3 Rev A.dwg

A3

Telstra Networks Wireless Program Delivery Template - 017866P02 Issue 12 11.04/2016

The copyright and ownership of this drawing is assigned to Telstra and must not be copied or saved elsewhere without written permission from Telstra.

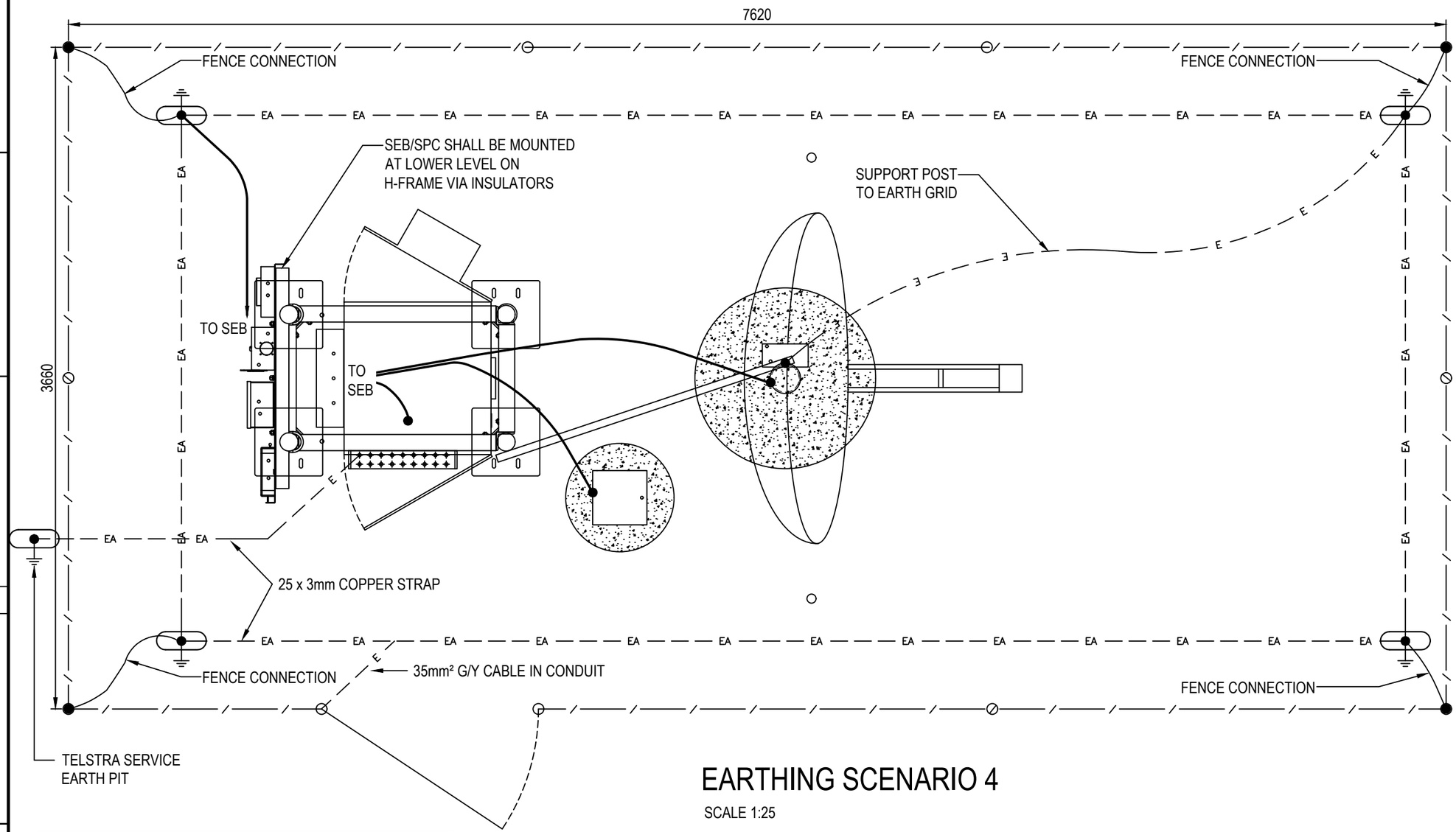

EARTHING SCENARIO 4

SCALE 1:25

NOTES:

1. REFER TO DRAWING 017866P201 SHEET 1 FOR ADDITIONAL CONNECTION DETAILS.
2. ALL EARTH STRAPS TO BE 50 x 3mm HOT DIPPED GALVANISED MS FLAT AND LAID TO MINIMUM DEPTH OF 500mm.
3. TELSTRA EXCHANGE SITES WILL HAVE AN EXISTING EARTHING SYSTEM PRESENT. CHECK RECORDS FOR LOCATION. NOTE THAT THERE MAY BE AN OBSOLETE SYSTEM IN SITU, TESTING WILL BE REQUIRED TO ENSURE THAT EARTHING SYSTEM IS IN SERVICE.
4. SEB/SPC FOR SAN INSTALLATION SHALL BE CONNECTED TO EXISTING SERVICE EARTH VIA A BOLTED CONNECTION THAT CAN BE BROKEN FOR EARTH SYSTEM TESTING. THE BOND IS TO BE UNDERTAKEN EXTERNAL TO THE BUILDING AND MUST NOT RUN VIA EQUIPMENT AREAS.
5. STANDARD ELECTRODES TO BE STAINLESS STEEL CLAD ROD (S/I 446/16) 1440mm LONG AT SPACING OF MINIMUM 2 ELECTRODES DEEP.
6. ALL ELECTRODES ARE TO BE INSTALLED AND PLACED WITHIN P1/P2 INSPECTION PIT.
7. 19/1.53mm GREEN AND YELLOW COPPER CABLE SHALL RUN FROM THE PROPOSED SEB/SPC FOR SAN INSTALL, TERMINATE AT ELECTRODE AND CONTINUE TO EXISTING SERVICE EARTH SYSTEM.
8. REFER TO EARTHING GUIDELINES SHEET G4-2 AND G4-3.
9. ALL CONNECTIONS TO EARTH ELECTRODES AND JOINTS ARE TO BE TREATED WITH DENSO PASTE AND TAPE.
10. WHERE ELECTRODES CAN NOT BE DRIVEN OR EARTH RESISTIVITY IS HIGH, DRILLING MAY BE REQUIRED. PRE-DRILLED HOLES SHALL BE BACK FILLED WITH EARTH ENHANCING COMPOUND (E.G CALCIUM BENTONITE AND GYPSUM SLURRY)
11. WHERE FENCING IS REQUIRED, INTERCONNECT TO FENCE POSTS AT GATE. REFER DRAWING 017866P201 SHEET 1.

EARTH ELECTRODE SCHEDULE			
TYPE	DIAMETER	QUANTITY	DEPTH
SOLID COPPER ROD	14mm	4	4m

EARTH GRID SCHEDULE	
TYPE	DIMENSIONS
COPPER STRAP	25 x 3mm

LEGEND

EARTH STRAP — — — EA — — — EA — —

35mm² G/Y INSULATED CABLE (19/1.53). ———

EARTH INSPECTION PIT

SITE FENCING

EARTH ELECTRODE

SERVICE EARTH BAR SEB

NOTE: THIS DRAWING TO BE READ IN CONJUNCTION WITH SHEET G4-1

FOR CONSTRUCTION

COMPLIANCE BOX
COMPLETED AS PER DESIGN ☐
ALTERATIONS IN RED ☐
NAME (PRINT)
SIGNATURE DATE

ORDER	DRAWN	CHKD	AMENDMENT	EXAM	APPD	DATE	ISS
	AH	HD	EXCHANGE SATELLITE INSTALLATION	HD	HD	18.05.21	0.1

Telstra

SATELLITE ACCESS NODE SITE 116351
OXFORD FALLS - SYDNEY ITC
SITE EARTHING - OPTION 1
OXFORD FALLS RD, OXFORD FALLS

DWG NO. N745783 SHT NO. G4

© Telstra Corporation Limited ABN 33 051 775 556 All rights reserved.

Cad file: 30092220 WO009 OXFORD FALLS - SYDNEY ITC Rev A.dwg

The copyright and ownership of this drawing is assigned to Telstra and must not be copied or saved elsewhere without written permission from Telstra.

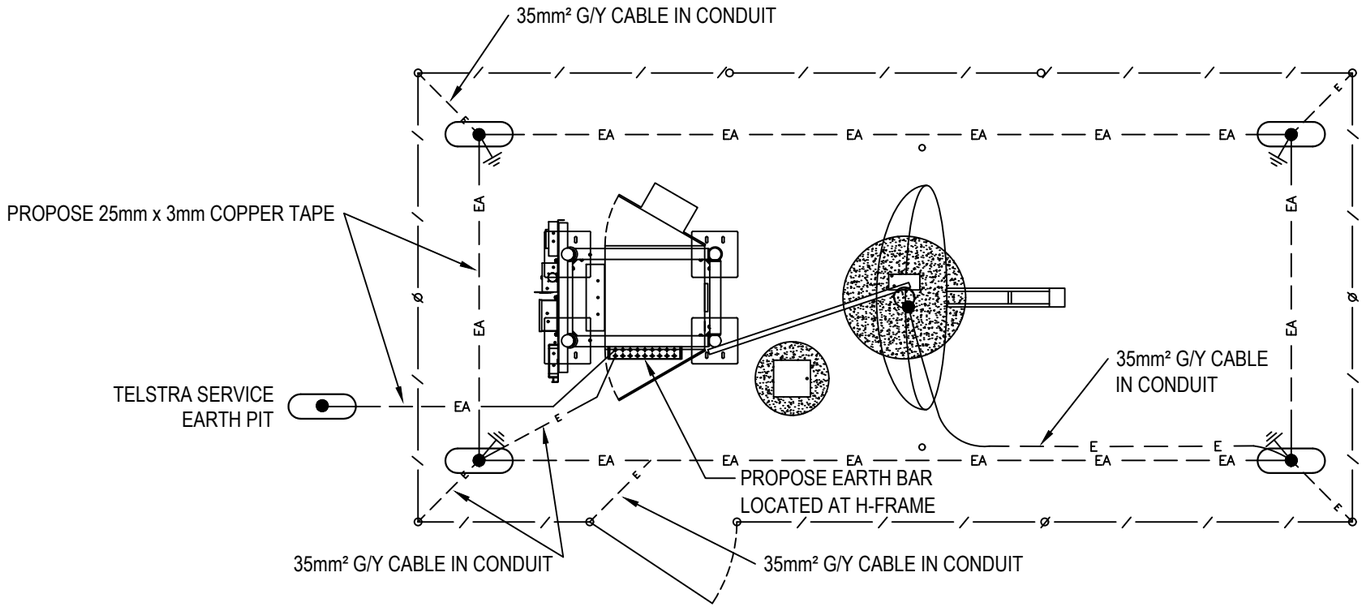

EARTHING SCENARIO 4

SCALE 1:50

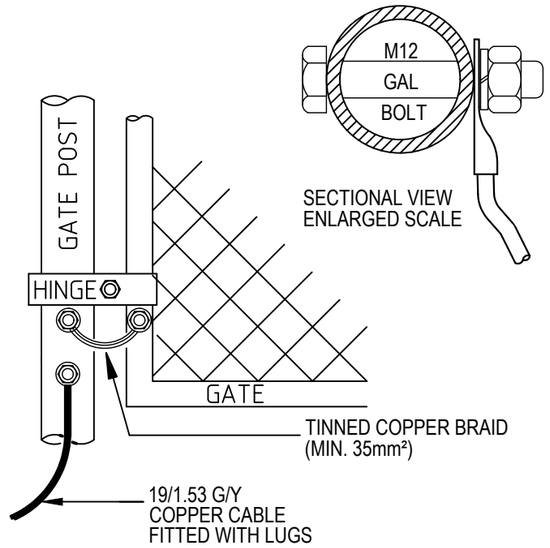

FENCE & GATE DETAIL

NOT TO SCALE

EARTHING GUIDELINES

	TELSTRA ACTIVE EARTH RESISTANCE (TAE) STATUS (TO BE CHECKED PART OF SITE VISIT TO DETERMINE SAN EARTH SOLUTION AND INTERCONNECTIVITY)	SAN EARTHING SYSTEM	SAN EARTH RESISTANCE (ASSESSED ON INSTALLATION)	SAN (SEB) TO NEAREST TELSTRA ACTIVE EARTH (TAE)	SAN-TAE INTERCONNECTION SOLUTION	DIAGRAM REFERENCE
SCENARIO 4	>10 OHM	18m STRAP + 4* 4 ELECTRODES	<10 OHMS	NO DISTANCE LIMITED	YG DUCTED EARTH CABLE ONLY	1

FOR CONSTRUCTION

THIS SHEET TO BE READ IN CONJUNCTION WITH SHEET G4-3.

ORDER	DRAWN	CHKD	AMENDMENT	EXAM	APPD	DATE	ISS
	AH	HD	EXCHANGE SATELLITE INSTALLATION	HD	HD	18.05.21	0.1

COMPLIANCE BOX
COMPLETED AS PER DESIGN ☐
ALTERATIONS IN RED ☐
NAME (PRINT)
SIGNATURE DATE

Telstra

SATELLITE ACCESS NODE SITE 69557
NEWHAVEN EXCHANGE
EARTHING SCENARIO - SHEET 1 OF 2
PHILLIP ISLAND RD, NEWHAVEN

DWG NO. N745783 SHT NO. G4-2

© Telstra Corporation Limited ABN 33 051 775 556 All rights reserved.

Cad file: 30092220 WO009 OXFORD FALLS - SYDNEY A3 Rev A.dwg

The copyright and ownership of this drawing is assigned to Telstra and must not be copied or saved elsewhere without written permission from Telstra.

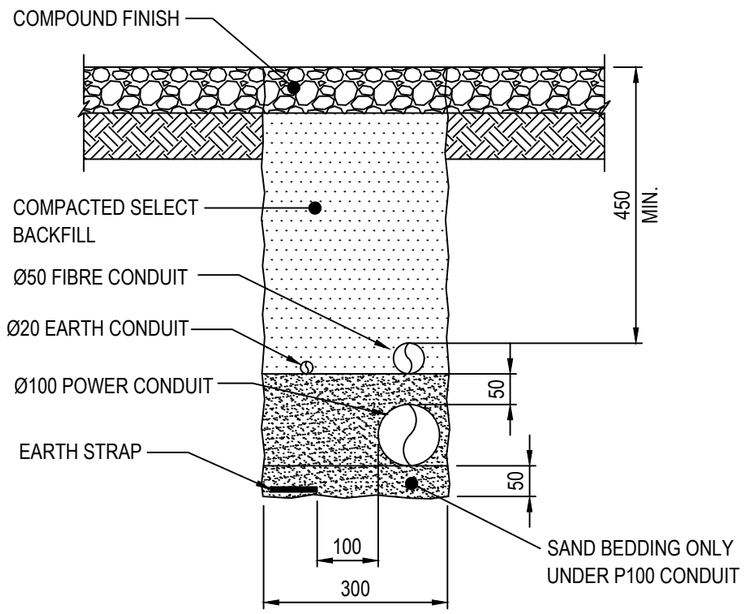

TRENCH DETAILS

SCALE 1:10

FOR CONSTRUCTION

ORDER	DRAWN	CHKD	AMENDMENT	EXAM	APPD	DATE	ISS
	AH	HD	EXCHANGE SATELLITE INSTALLATION	HD	HD	18.05.21	0.1

COMPLIANCE BOX
COMPLETED AS PER DESIGN ☐
ALTERATIONS IN RED ☐
NAME (PRINT)
SIGNATURE DATE

Telstra

SATELLITE ACCESS NODE SITE 116351
OXFORD FALLS - SYDNEY ITC
TRENCH DETAILS
OXFORD FALLS RD, OXFORD FALLS

DWG NO. N745783 SHT NO. G4-4

© Telstra Corporation Limited ABN 33 051 775 556 All rights reserved.

Cad file: 30092220 WO009 OXFORD FALLS - SYDNEY ITC Rev A.dwg

A3

The copyright and ownership of this drawing is assigned to Telstra and must not be copied or saved elsewhere without written permission from Telstra.

NOTES:

1. ALL LOW VOLTAGE AND ELECTRICAL INSTALLATION SHALL BE IN ACCORDANCE WITH THESE SPECIFICATION, TELSTRA CIVIL DESIGN MANUAL, TELSTRA EARTHING MANUAL, ALL REFERENCED TELSTRA STANDARD DOCUMENTATION ALONG WITH AS/NZS3000, AS/NZS3008, AS/NZS3015, AS/NZS3017, AS/NZS1768, AS/ACIF S006, RELEVANT STATE/TERRITORY SPECIFIC INSTALLATION RULES AND ALL OTHER RELEVANT AUSTRALIAN STANDARDS AS APPLICABLE TO PROPOSED WORKS.
2. ALL LOW VOLTAGE AC POWER WORKS SHALL BE COMPLETED BY LICENSED ELECTRICIAN IN ACCORDANCE WITH INSTALLATION RULES AND RELEVANT SAFETY PRACTICES APPLICABLE TO SITE.
3. ALL WORKS SHALL BE LIAISED AND COORDINATED WITH RELEVANT PERSONNEL, SITE REPRESENTATIVES, LANDOWNER, SITE PROVIDER AND/OR POWER AUTHORITY AS APPLICABLE.
4. ALL WORKS SHALL BE AS PER TELSTRA SPECIFICATIONS AND APPROVED MOPS INCLUDING LABELLING.
5. CONTRACTOR SHALL MAKE THEMSELVES AWARE OF ALL SITE CONDITIONS AND SAFETY REQUIREMENTS PRIOR TO COMMENCING ANY WORK ON SITE.
6. CONTRACTOR TO VALIDATE ALL APPROVALS AND OUTAGES REQUIRED TO CONDUCT PROPOSED WORKS. THIS INCLUDES BUT IS NOT LIMITED TO ANY DONOR SITES AND/OR FAR END SITES WHICH MAY BE IMPACTED DUE TO PROPOSED WORKS.
7. ALL CONTRACTORS WORKING ON TELSTRA FACILITIES SHALL BE TELSTRA ACCREDITED AS PER TELSTRA PROTOCOLS.
8. ALL LV CABLES SHALL BE INSTALLED IN CONDUITS. ANY EXPOSED CONDUITS SHALL BE UV PROTECTED.
9. NO SEPARATE METERING IS REQUIRED FOR SAN INSTALLATION UNLESS SPECIFIED AND DIRECTED BY TELSTRA.
10. NEUTRAL AND ELECTRICAL SAFETY EARTH FOR SAN INSTALLATION SHALL BE TAKEN FROM EXCHANGE EXISTING M.E.N.

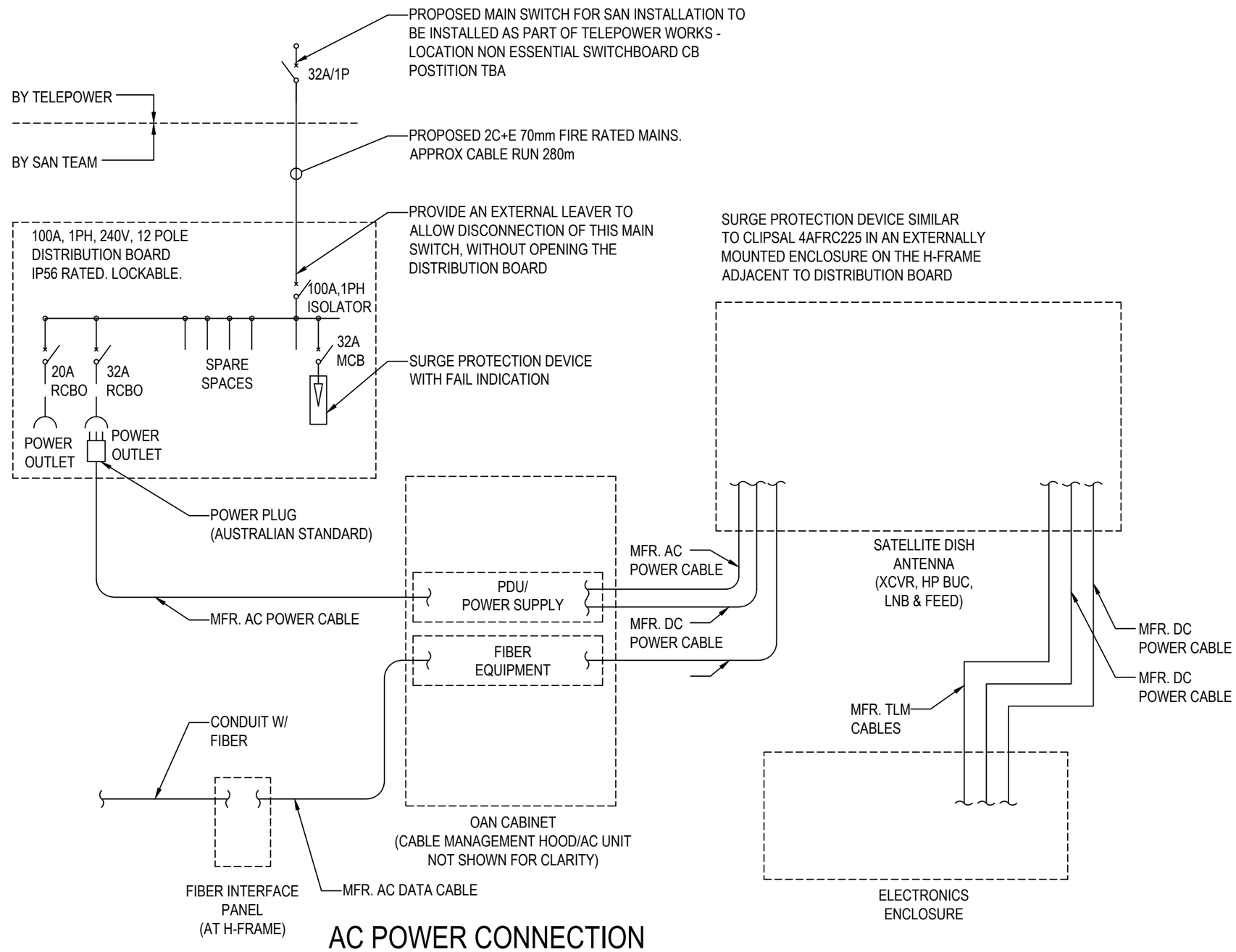

AC POWER CONNECTION

NOT TO SCALE

FOR SITE SPECIFIC NOTES REFER TO SHEET S0.

FOR CONSTRUCTION

ORDER	DRAWN	CHKD	AMENDMENT	EXAM	APPD	DATE	ISS
	AH	HD	EXCHANGE SATELLITE INSTALLATION	HD	HD	18.05.21	0.1

COMPLIANCE BOX
COMPLETED AS PER DESIGN ☐
ALTERATIONS IN RED ☐
NAME (PRINT)
SIGNATURE DATE

Telstra

SATELLITE ACCESS NODE SITE 116351
OXFORD FALLS - SYDNEY ITC
AC POWER CONNECTION
OXFORD FALLS RD, OXFORD FALLS

DWG NO. N745783 SHT NO. E2

© Telstra Corporation Limited ABN 33 051 775 556 All rights reserved.

Cad file: 30092220 WO009 OXFORD FALLS - SYDNEY ITC Rev A.dwg

The copyright and ownership of this drawing is assigned to Telstra and must not be copied or saved elsewhere without written permission from Telstra.

REFER SITE-SPECIFIC DRAWINGS FOR SET-OUT DIMENSIONS

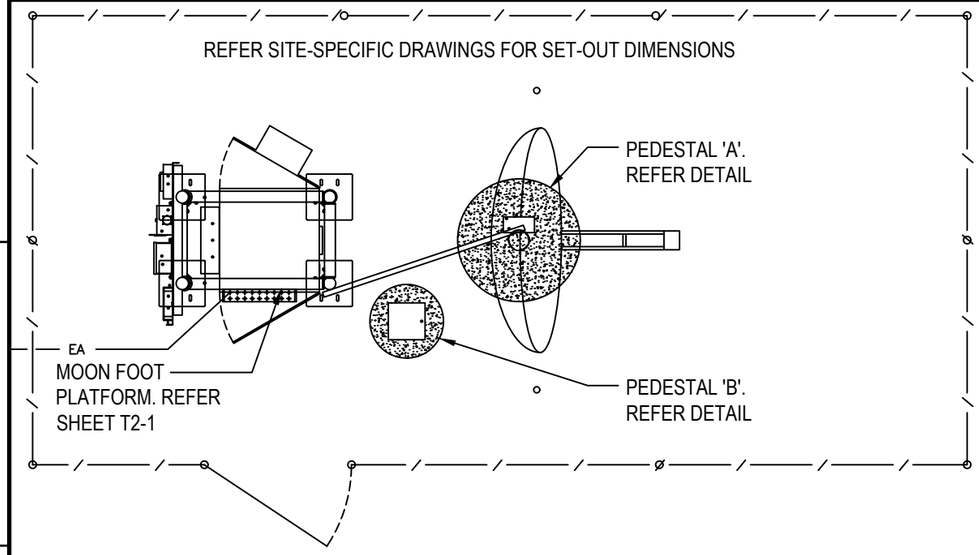

TYPICAL COMPOUND - PLAN VIEW

SCALE 1:50

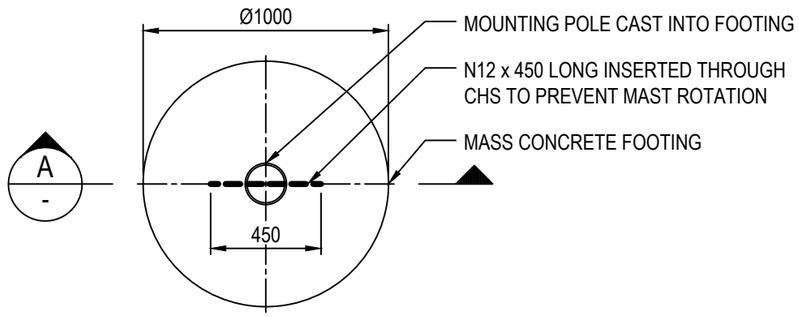

PEDESTAL 'A' - PLAN VIEW

SCALE 1:25

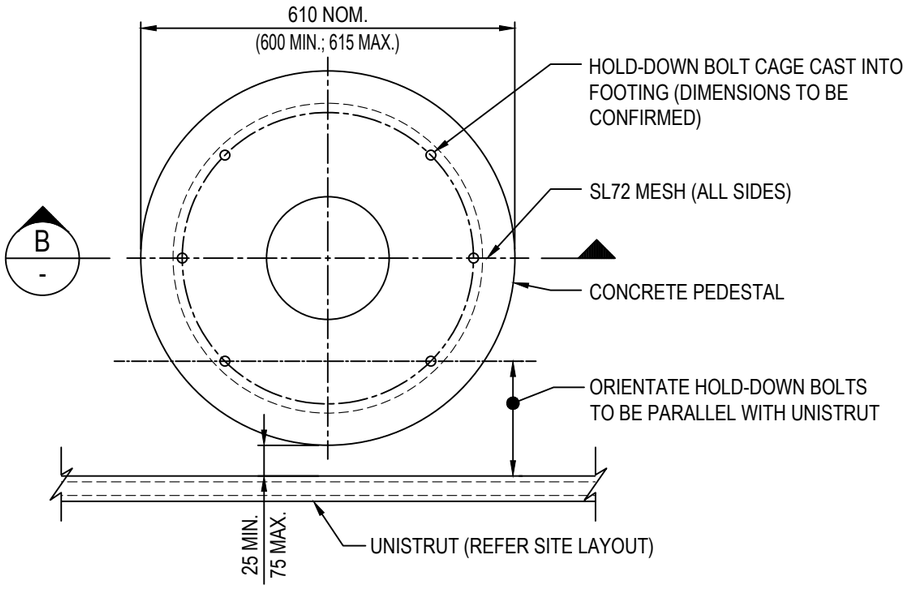

PEDESTAL 'B' - PLAN VIEW

SCALE 1:10

COMPLIANCE BOX

COMPLETED AS PER DESIGN ☐

ALTERATIONS IN RED ☐

NAME (PRINT)

SIGNATURE DATE

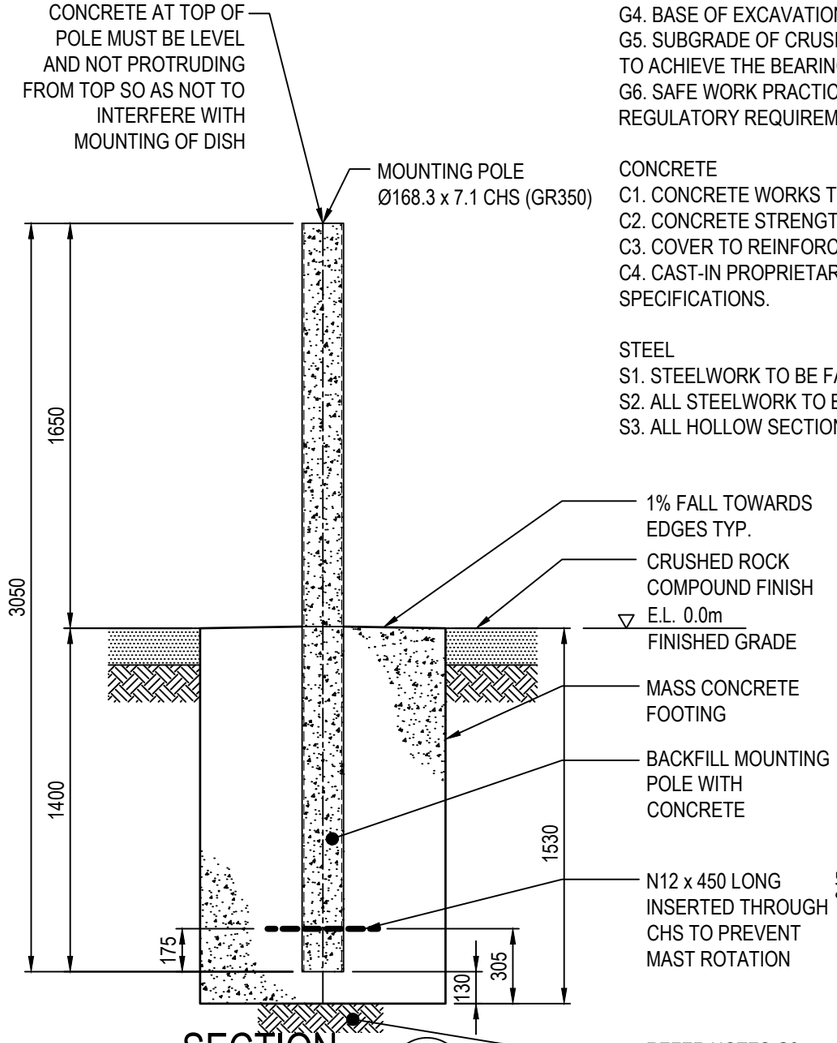

SECTION A

SCALE 1:25

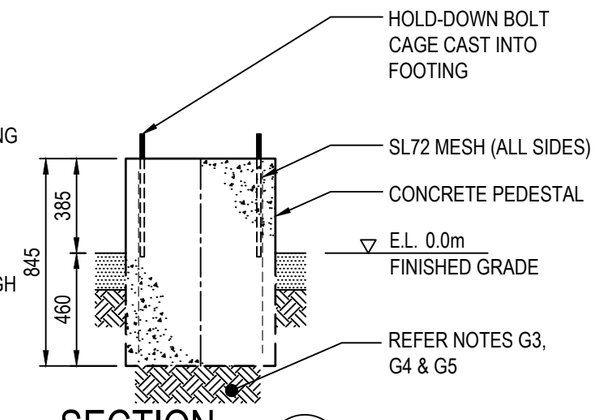

SECTION B

SCALE 1:25

GENERAL NOTES:

GENERAL

G1. THIS DRAWING TO BE READ IN CONJUNCTION WITH SITE-SPECIFIC DRAWINGS.
G2. FOR GENERAL CONSTRUCTION & FABRICATION NOTES REFER TO TELSTRA STANDARD DRAWING 017866P05.
G3. FOOTINGS TO BE FOUNDED ON UNDISTURBED, NATURALLY CONSOLIDATED SOIL WITH MINIMUM ALLOWABLE VERTICAL BEARING CAPACITY 100kPa (U.N.O). A SUITABLY EXPERIENCED PERSON SHALL CONFIRM THE BEARING CAPACITY ON-SITE PRIOR TO INSTALLING THE CONCRETE/EQUIPMENT.
G4. BASE OF EXCAVATION SHALL BE CLEAN, FLAT & FREE OF SOFT/ORGANIC MATERIAL.
G5. SUBGRADE OF CRUSHED AGGREGATE OR ROAD BASE SHALL BE USED AS NECESSARY TO ACHIEVE THE BEARING CAPACITY REQUIREMENT.
G6. SAFE WORK PRACTICES SHALL BE IMPLEMENTED IN ACCORDANCE WITH LOCAL REGULATORY REQUIREMENTS & AS2159-2009.

CONCRETE

C1. CONCRETE WORKS TO BE COMPETED IN ACCORDANCE WITH AS3600-2018.
C2. CONCRETE STRENGTH TO BE MIN f'c = 32MPa AT 28 DAYS.
C3. COVER TO REINFORCEMENT TO BE MIN. 75mm (TYP ALL SIDES).
C4. CAST-IN PROPRIETARY ITEMS TO BE INSTALLED TO MANUFACTURERS SPECIFICATIONS.

STEEL

S1. STEELWORK TO BE FABRICATED IN ACCORDANCE WITH AS4100-2020.
S2. ALL STEELWORK TO BE HOT DIP GALVANISED TO AS4680-2006 U.N.O.
S3. ALL HOLLOW SECTIONS TO BE GRADE 350 TO AS1163-2016 U.N.O.

THIS SHEET TO BE READ IN CONJUNCTION WITH SHEET T2-1.

FOR CONSTRUCTION

ORDER	DRAWN	CHKD	AMENDMENT	EXAM	APPD	DATE	ISS
	AH	HD	EXCHANGE SATELLITE INSTALLATION	HD	HD	18.05.21	0.2

© Telstra Corporation Limited ABN 33 051 775 556 All rights reserved.

Telstra

SATELLITE ACCESS NODE SITE 116351
OXFORD FALLS - SYDNEY ITC
CONCRETE FOUNDATION DETAILS
OXFORD FALLS RD, OXFORD FALLS

DWG NO. N745783 SHT NO. T2

Cad file: 30092220 WO009 OXFORD FALLS - SYDNEY ITC Rev A.dwg

The copyright and ownership of this drawing is assigned to Telstra and must not be copied or saved elsewhere without written permission from Telstra.

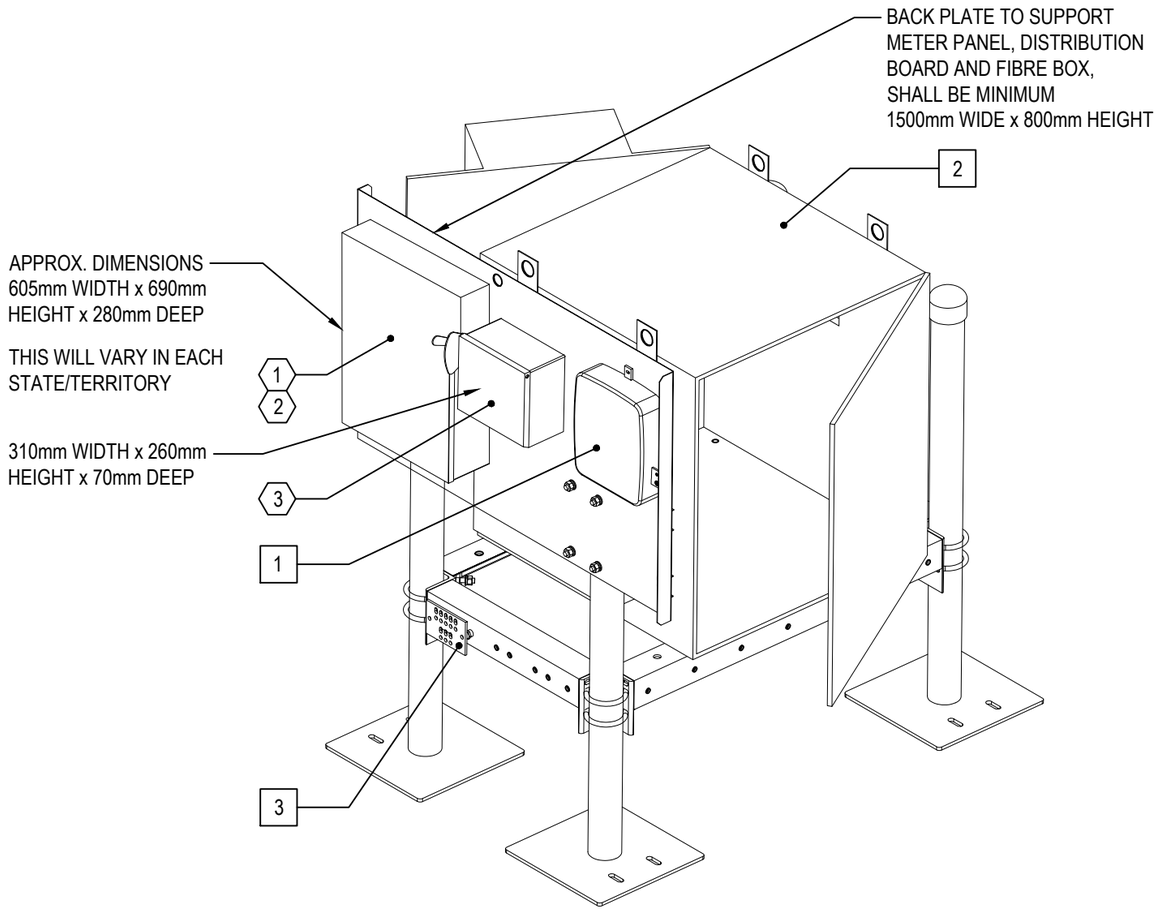

EQUIPMENT PLATFORM - H-FRAME DETAIL

NTS

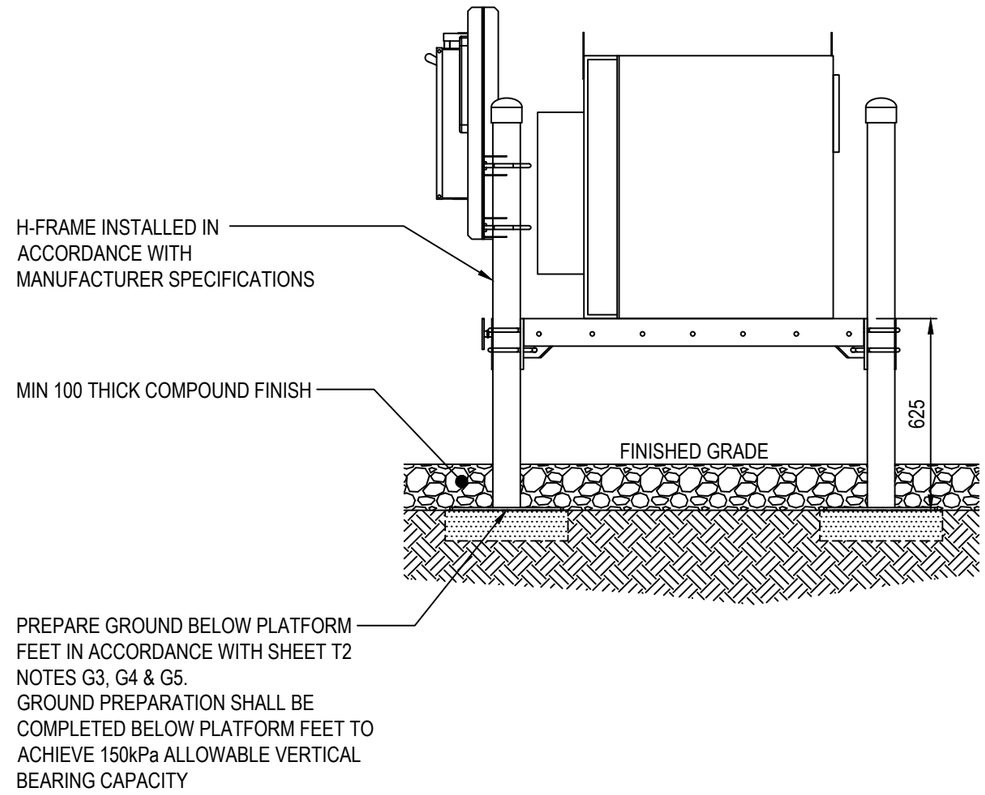

H-FRAME FOUNDATION

SCALE: 1:20

CLIENT EQUIPMENT KEYED NOTES:

1. FIBRE INTERFACE PANEL
2. OAN CABINET W/ EXTERNAL AC UNIT
3. EQUIPMENT GROUND BAR

ELECTRICAL SITE EQUIPMENT KEYED NOTES:

1. 100A UTILITY METER (IF REQUIRED)
2. SIZE OF THE ENCLOSURE SHALL SUIT THE POWER UTILITY REQUIREMENTS IN THE RELEVANT STATES AND TERRITORIES
3. 100A DISTRIBUTION BOARD WITH EXTERNAL SURGE PROTECTION DEVICE

COMPLIANCE BOX

COMPLETED AS PER DESIGN ☐

ALTERATIONS IN RED ☐

NAME (PRINT)

SIGNATURE DATE

FOR CONSTRUCTION

THIS SHEET TO BE READ IN CONJUNCTION WITH SHEET T2.

ORDER	DRAWN	CHKD	AMENDMENT	EXAM	APPD	DATE	ISS
	AH	HD	EXCHANGE SATELLITE INSTALLATION	HD	HD	18.05.21	0.1

© Telstra Corporation Limited ABN 33 051 775 556 All rights reserved.

Telstra

SATELLITE ACCESS NODE SITE 116351
OXFORD FALLS - SYDNEY ITC
EQUIPMENT PLATFORM - H-FRAME DETAIL
OXFORD FALLS RD, OXFORD FALLS

DWG NO. N745783 SHT NO. T2-1

Cad file: 30092220 WO009 OXFORD FALLS - SYDNEY ITC Rev A.dwg

A3

The copyright and ownership of this drawing is assigned to Telstra and must not be copied or saved elsewhere without written permission from Telstra.

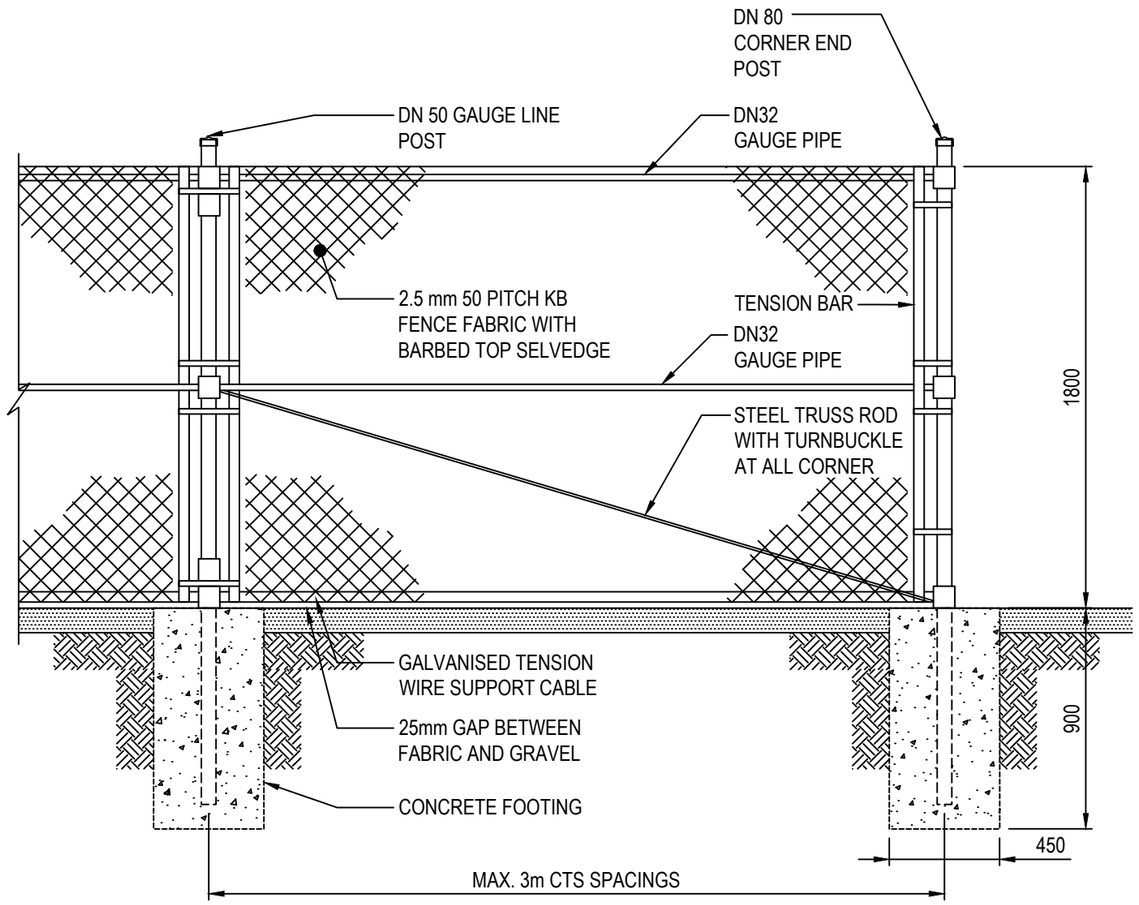

TYPICAL FENCE DETAILS

SCALE 1:25

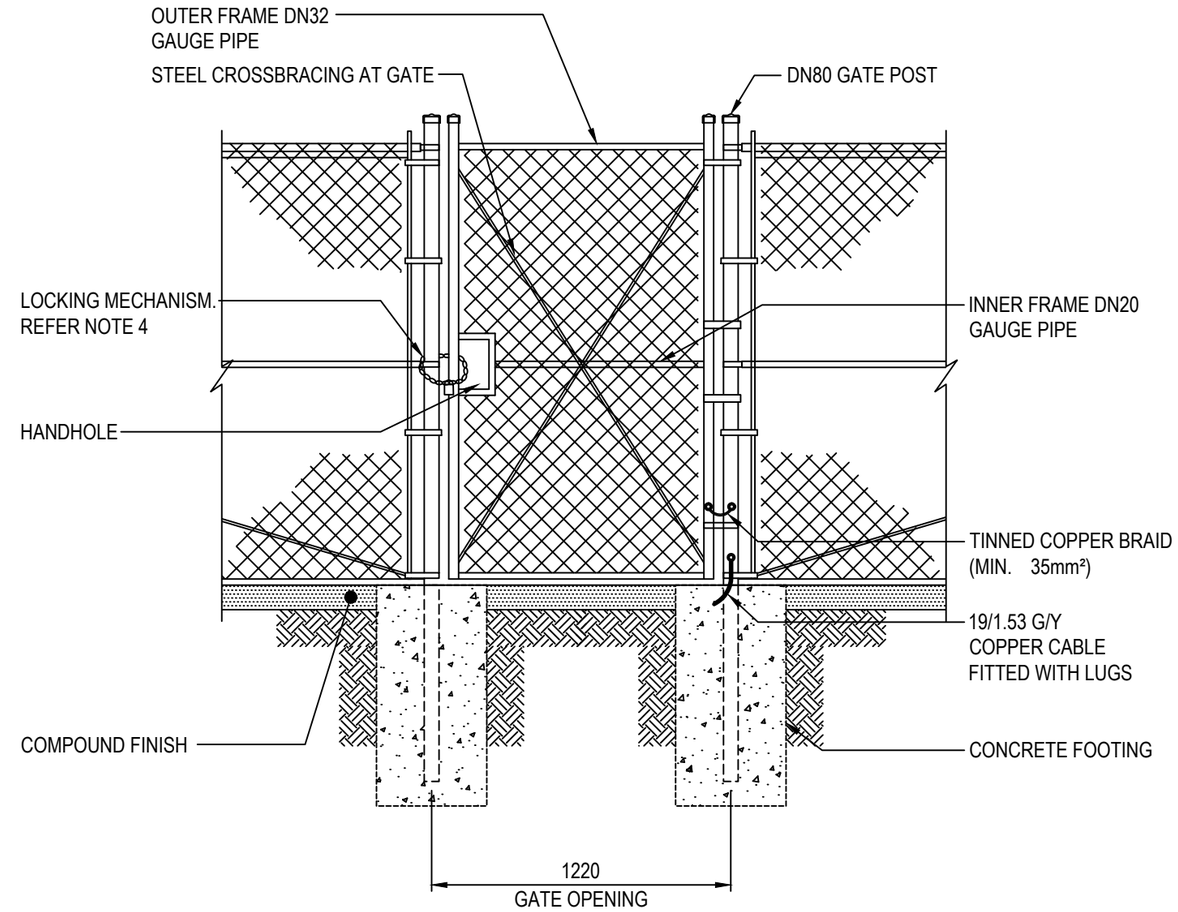

GATE DETAILS

SCALE 1:25

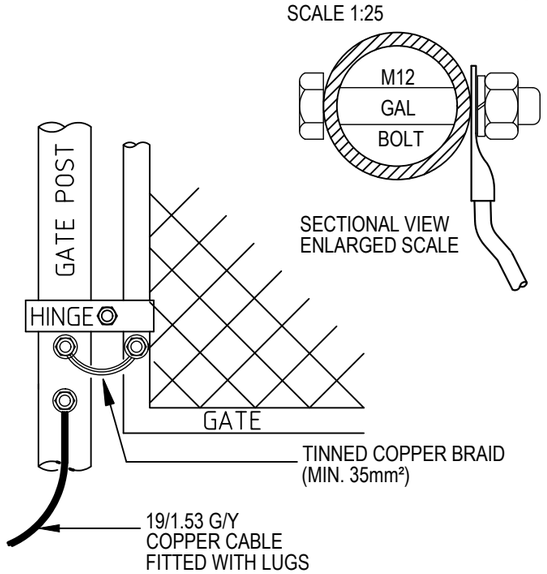

FENCE & GATE DETAIL

NOT TO SCALE

NOTES:

1. POSTS TO BE SPACED 3m CTS MAX. SET IN CONCRETE HAVING A MIN. COMPRESSION STRENGTH OF 20 MPa @ 28 DAYS. CROWN TO SHED WATER. FOOTING SIZE TO BE Ø450mm x 900mm DEEP MIN. OR AS REQUIRED BY LOCAL CODE AND DESIGN CONSIDERATIONS.
2. BRACE AND TRUSS ASSEMBLY AT EACH CORNER, TERMINAL AND GATE POST.
3. ALL MATERIALS TO BE GALVANISED AND COMPLY WITH CLASS 1 SECURITY QUALITY OF AS1725.1.
4. GATE SHALL HAVE LATCH FORK WITH LOCKING MECHANISM (PADLOCK ACCEPTED).

FOR CONSTRUCTION

COMPLIANCE BOX

COMPLETED AS PER DESIGN ☐

ALTERATIONS IN RED ☐

NAME (PRINT)

SIGNATURE DATE

ORDER	DRAWN	CHKD	AMENDMENT	EXAM	APPD	DATE	ISS
	AH	HD	EXCHANGE SATELLITE INSTALLATION	HD	HD	18.05.21	0.1

© Telstra Corporation Limited ABN 33 051 775 556 All rights reserved.

Telstra

SATELLITE ACCESS NODE SITE 116351
OXFORD FALLS - SYDNEY ITC

COMPOUND FENCE AND GATE DETAILS
OXFORD FALLS RD, OXFORD FALLS

DWG NO. N745783 SHT NO. T8

Cad file: 30092220 WO009 OXFORD FALLS - SYDNEY ITC Rev A.dwg

A3

The copyright and ownership of this drawing is assigned to Telstra and must not be copied or saved elsewhere without written permission from Telstra.