EROSION + SEDIMENT CONTROL

1. CONNECT DRAINAGE TO STORMWATER SYSTEM AS SOON AS PRACTICABLE
2. DISPOSE OF SOIL, SAND AND SILT BUILD UP ON SITE
3. CONSTRUCTION AREA IS TO REMAIN FULLY ENCLOSED AND ANY BREAKS RECTIFIED IMMEDIATELY
4. FILL TRENCHES IMMEDIATELY AFTER SERVICES ARE LAID
5. MATERIALS ARE NOT TO BE WASHED INTO THE STORMWATER SYSTEM
6. MATERIALS AND WASTE ARE TO BE STORED AS INDICATED. CREATE DIVERSION DRAINS AROUND STOCKPILES AND COVER STORED MATERIALS WITH WATERPROOF COVERS.
7. ALL PERSONNEL ON SITE MUST BE FAMILIAR WITH COUNCILS SOIL AND WATER MANAGEMENT GUIDELINES
8. MINIMISE DUST DURING CONSTRUCTION WITH WATER SPRAY, SCREENING OR COVERING AS APPROPRIATE
9. ANY MATERIALS FOUND TO BE PRESENT ON COUNCILS FOOTPATH, KERB, GUTTER OR ROAD MUST BE CLEANED IMMEDIATELY AFTER BEING IDENTIFIED. NO MATERIALS ARE TO BE WASHED INTO COUNCIL'S STORMWATER DRAINAGE SYSTEM

GRASS BALE SEDIMENT BARRIER DETAIL

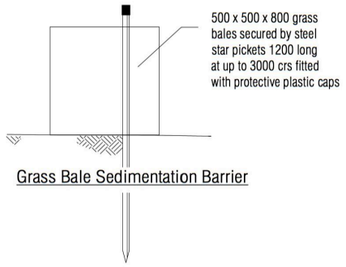

SEDIMENT BARRIER DETAIL

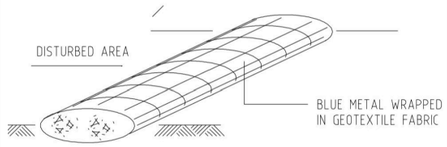

SEDIMENT FENCE DETAIL

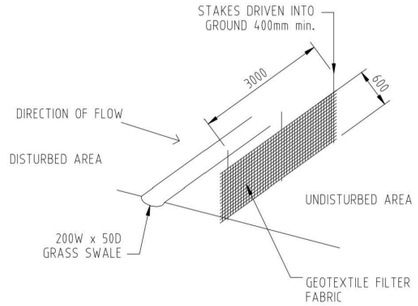

DRAWING LEGEND:

- BUILDING MATERIAL STORAGE
- WASTE STORAGE
- SITE ACCESS AND STABALISED ENTRY
- WC — SITE TOILET
- SEDIMENT CONTROL FENCE
- SECURITY FENCE
- SITE BOUNDARY

STORMWATER CONCEPT PLAN

THIS DRAWING IS A DRAINAGE CONCEPT DRAWING ONLY. FURTHER DETAIL IF REQUIRED TO BE PREPARED BY A QUALIFIED HYDRAULIC ENGINEER OR LICENSED PLUMBER. ALL STORMWATER DRAINAGE TO BE INSTALLED IN ACCORDANCE WITH AS 3500.3. CONTRACTOR TO VERIFY LOCATION AND RELOCATE AS NECCESSARY ALL SERVICES ONSITE. GAS, SEWER, ELECTRICITY EAVES GUTTER TO HAVE MINIMUM FALL OF 1 IN 200. INSTALLATION OF GUTTERS & DOWNPIPES IS TO BE IN ACCORDANCE WITH AS2179 & AS2180. THE PLUMBING CONTRACTOR SHALL UNDERTAKE AN AUTHORITIES SERVICES SEARCH & OBTAIN ALL AVAILABLE INFORMATION ON AUTHORITES SERVICES WITHIN THE STREET & SITE AREA. DIAL BEFORE YOU DIG (PHONE 1100)

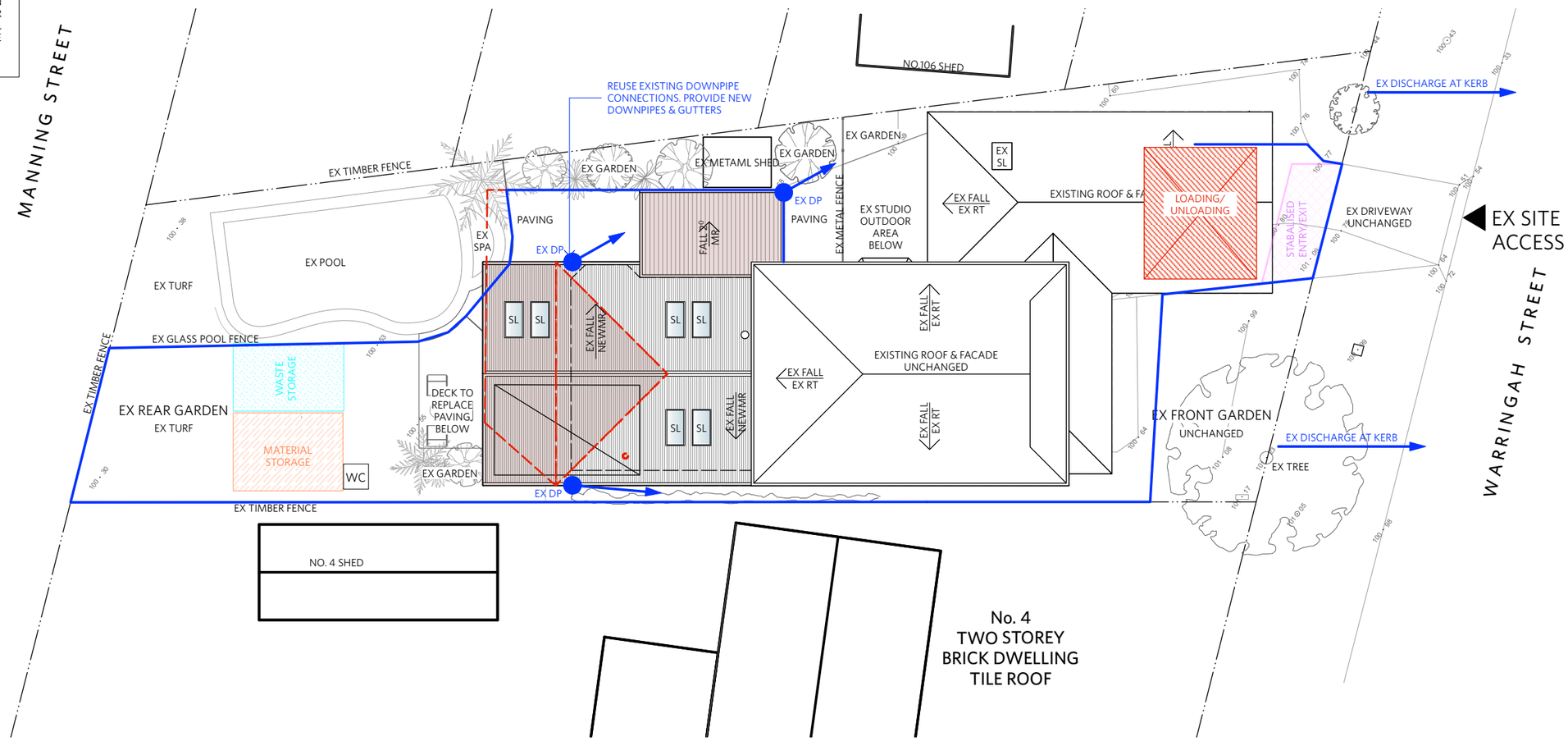

PASSER

PASSER Architects
NOMINATED ARCHITECT
KATRINA PASSER REG 9608
PO BOX 326
MILSONS POINT 1565
abn 9619 412 7103
p 0481 133 368
e info@passer.com.au
www.passer.com.au

N

2m 4m 6m 8m 10m 12m 20m

ISSUE No.

-	DRAFT FOR CLIENT REVIEW	31.01.19
A	ISSUED FOR DA	06.02.19

LEGEND:

- NEW MR
- NEW WORK COLOURED
- PROPOSED STRUCTURE
- TO BE DEMOLISHED
- SETBACKS
- LINE OF STRUCTURE OVER / UNDER

COL	COLUMN
COS	CHECK ONSITE
D	DOOR
DP	DOWNPIPE
EX	EXISTING
FC	FIBRE CEMENT
FB	FACE BRICK
MR	METAL ROOFING
PB	PLASTERBOARD
PC	POLYCARBONATE ROOF
PBR	PAINTED BRICKWORK
RT	ROOF TILE
SC	SCREEN
W	WINDOW

FOR DEVELOPMENT APPLICATION
(NOT FOR CONSTRUCTION)

These drawings are to be read in conjunction with all other relevant drawings, specifications and documentation, including consultants documentation. Any discrepency, error or omission found between this document and other relevant documentation must be immediately referred to PASSER Architects for clarification prior to any action.

All design, materials and workmanship must be in accordance with all relevant Australian Standards and building codes.

Figure dimensions take precedence over those scaled from the drawings.

This drawings has been produced for its agreed intended use only.

DRAWING TITLE

STORMWATER CONCEPT PLAN & SEDIMENT & EROSION CONTROL

PROJECT

WARRINGAH HOUSE

2 WARRINGAH STREET, NORTH BALGOWLAH, NSW 2093
for WILLIAM + LYNETTE KENNEDY

DRAWING No:

DA08

ISSUE: A

PROJECT: 1903

SCALE: 1:200 @ A3

DATE: FEB 2019