Legend

- Boundary
- Existing contours
- Existing concrete
- Existing rock outcrop
- Proposed turf
- Proposed concrete
- Proposed tiles
- Proposed deck
- Galv. garden edge
- Stepping stones in ground covers / pebbles
- Masonry retaining wall
- Existing tree to be retained.
- Existing tree to be removed

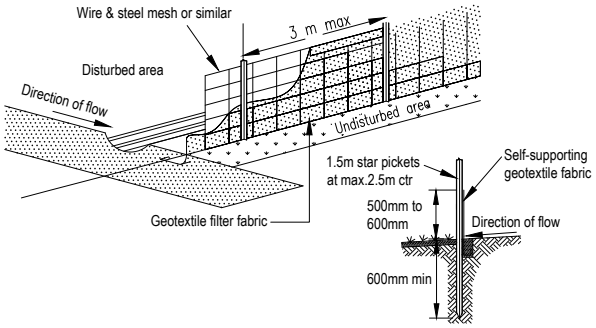

Sediment fence detail
N.T.S

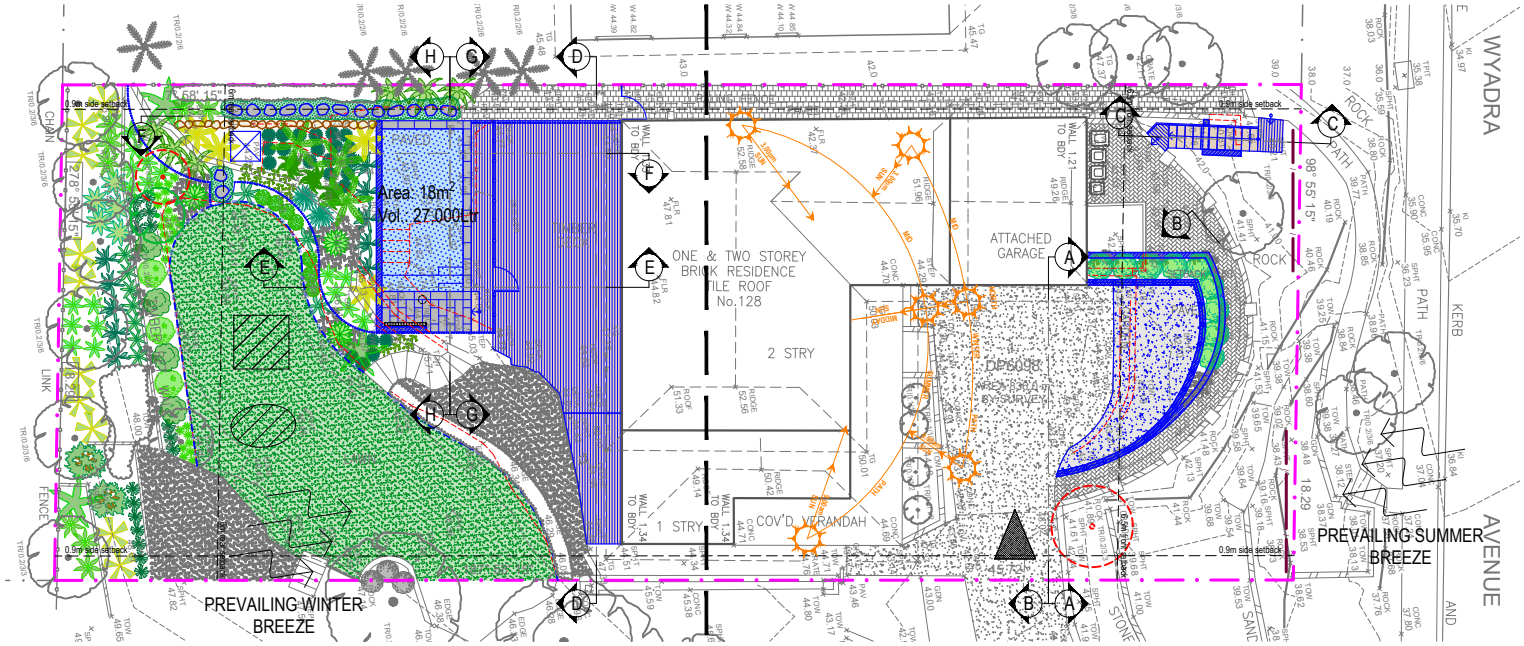

Zone B. Refer to L-03 for details.

Zone A. Refer to L-02 for details.

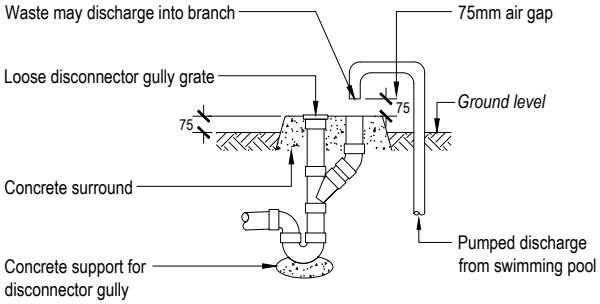

Note: Overflow relief gully (ORG) to be constructed to AS/NZS 3500.

Overflow relief gully
N.T.S

Landscaped Open Space Calculations

Site Area:	836m²
Required Landscaped Open Space:	334.40m² (40%)
Existing Landscaped Open Space:	340.53m² (40.73%)
Proposed Landscaped Open Space:	344.53m² (41.21%)
Required Rear Setback Landscaped Open Space:	54.86m² (50%)
Proposed Rear Setback Landscaped Open Space:	109.73m² (100%)

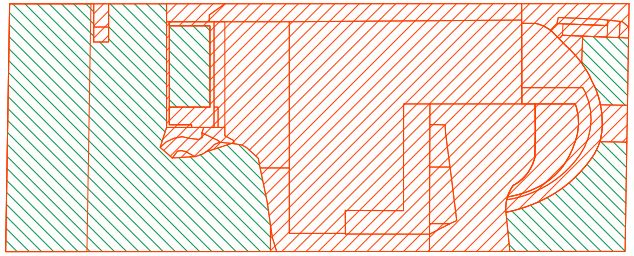

Landscaped Open Space Calculations Legend

- Landscaped Open Space Area
- Excluded From Landscaped Open Space Area

Sediment & erosion control notes

During earthworks the following procedures shall be followed:

1. Install silt barriers where shown on plan prior to commencement of works.
2. Silt barriers to be maintained regularly & after heavy rain by removal of built up silt & spreading silt on existing site when 50% capacity.
3. Repair any damages to fence immediately.
4. Clean up spillages outside silt fence immediately.
5. Sediment control measures to be left in place until works completed.
6. Topsoil from the work's area will be stockpiled for later use in landscaping if necessary.
7. Approved bins for building waste, concrete and mortar slurries, paints and acid washings will be provided by contractor.

Site Analysis Legend

	Site vehicle entry		Prevailing wind		Sediment control device during construction phase		Proposed 'hard' works shown blue
	Waste storage area during construction phase		Materials storage area during construction phase		Existing tree to be retained		

Note:
- Contractors to check and verify all dimensions and all levels on site prior to any works.
- Any discrepancies should be immediately referred to Serenescapes Landscape Designs.
- All work to comply with B.C.A. Statutory Authorities and relevant Australian Standards.
- Dimensions recognised over scaling. All measurements are in millimetres.
- Copyright Serenescapes Landscape Designs 2021.

serenescapes
Serenscapes Landscape Designs
ABN 71 611 726 222

Suite 54, 14 Narabang Way
Belrose NSW 2085
Tel: 02 9986 2157
info@serenescapes.com.au
www.serenescapes.com.au

Client:	Drawing Title:			
Shane & Tracy Harvey	Notification Site Plan			
Site Address: 128 Wyadra Avenue North Manly	Drawn by: Ben Farrar TLA Member	Project Number: 21791	Scale: NTS @ A4	Sheet Number: L-01 of 2

Rev:	Date:	Issue:	Checked:
B	05/08/2021	Preliminary Issue	EC
C	21/09/2021	Preliminary Issue	EC
D	11/10/2021	Preliminary Issue	EC
E	03/11/2021	DA Issue	EC

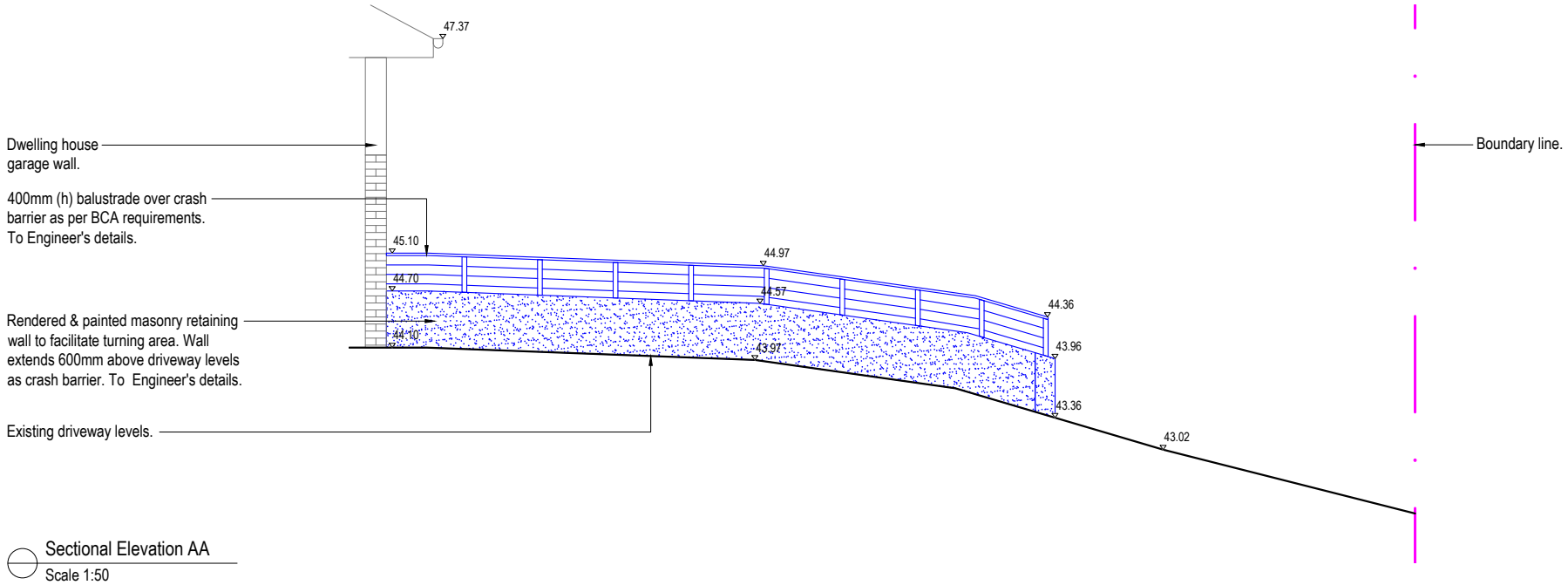

Sectional Elevation AA

Scale 1:50

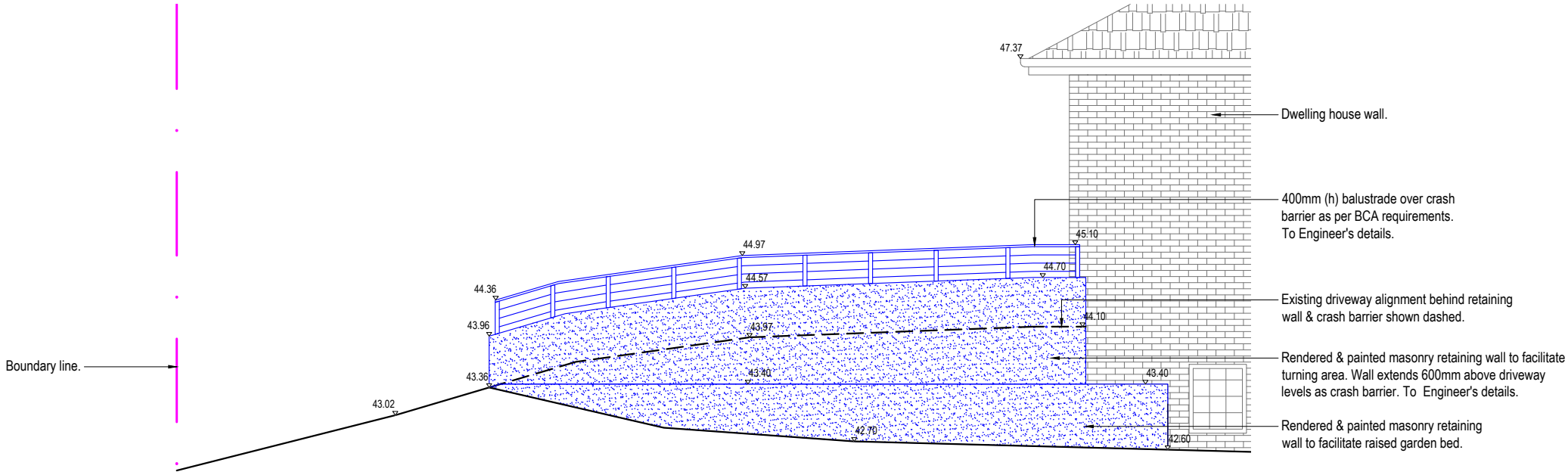

Sectional Elevation BB

Scale 1:50

Note:
- Contractors to check and verify all dimensions and all levels on site prior to any works.
- Any discrepancies should be immediately referred to Serenescapes Landscape Designs.
- All work to comply with B.C.A. Statutory Authorities and relevant Australian Standards.
- Dimensions recognised over scaling. All measurements are in millimetres.
- Copyright Serenescapes Landscape Designs 2021.

serenescapes
Serenscapes Landscape Designs
ABN 71 611 726 222

Suite 54, 14 Narabang Way
Belrose NSW 2085
Tel: 02 9986 2157
info@serenescapes.com.au
www.serenescapes.com.au

Client:	Drawing Title:			
Shane & Tracy Harvey	Notification Sectional Elevations			
Site Address: 128 Wyadra Avenue North Manly	Drawn by: Ben Farrar TLA Member	Project Number: 21791	Scale: NTS @ A4	Sheet Number: L-02 of 2

Rev:	Date:	Issue:	Checked:
B	05/08/2021	Preliminary Issue	EC
C	21/09/2021	Preliminary Issue	EC
D	11/10/2021	Preliminary Issue	EC
E	03/11/2021	DA Issue	EC