189 RIVERVIEW ROAD

AVALON BEACH NSW 2107

HYDRAULIC SERVICES

DRAWING LIST

No.	DRAWING TITLE
HY-000	COVER SHEET AND DRAWING SCHEDULE
HY-001	LEGENDS, SYMBOLS & NOTES
HY-100	STORMWATER ROOF DRAINAGE PLAN
HY-101	STORMWATER INGROUND DRAINAGE
HY-201	SEDIMENT CONTROL PLANS

Status: FOR DA

No.	Date	Details
A	12.07.21	ISSUED FOR INFORMATION

Amendments

COORDINATED REFERENCE DRAWINGS

SERVICE	DRAWING NUMBER	ISSUE	DATE
ARCH	-	-	-
MECH	-	-	-
STRUCT	-	-	-
ELEC	-	-	-
CIVIL	-	-	-

CONSULTANT
HYDROTEC CONSULTANTS PTY LTD
PO BOX 3020 ROSCROFT NSW 2119
M : 0409 207 611
E : info@hydrotecconsultants@gmail.com
ACN : 629 351 091
ABN : 30 629 351 091

DURIEDESIGN

Architect: ALCHEMY ARCHITECTS PTY LTD

Client: JAMIE DURIE

Project: 189 RIVERVIEW ROAD AVALON BEACH NSW 2107

Drawing: HYDRAULIC SERVICES COVER SHEET & DRAWING SCHEDULE

Project No.: MJ2134

Drawing No. [Revision]: HY-000 REV: A

Drawn: JBH | Design: MH | Verified: MH

Date: - | Scale: NTS @ A1 | Size: A1

NORTH

P:\PROJECTS\MAZ\MAZ134 189 RIVERVIEW ROAD, AVALON BEACH\DRAWINGS\HY000.DWG

ABBREVIATIONS

@ H/L	AT HIGH LEVEL
AAV	AIR ADMITTANCE VALVE
AB	ACCESSIBLE BASIN
A/C	AIR CONDITIONING
ASHR	ACCESSIBLE SHOWER
AWC	ACCESSIBEL WATER CLOSET
APPROX.	APPROXIMATE
B	BASIN
BT	BOUNDARY TRAP
BT/FW	BUCKET TRAP/FLOORWASTE
CO	CLEAR OUT
Cu.	COPPER
CS	CLEANERS SINK
C/S	CEILING SPACE
CW	COLD WATER SERVICE
DFH	DOUBLE HEAD FIRE HYDRANT
DP	DOWNPIPE
EJ	EXPANSION JOINT
FFL	FINISHED FLOOR LEVEL
FGL	FINISHED GROUND LEVEL
FH	FIRE HYDRANT
FHR	FIRE HOSE REEL
FW	FLOORWASTE
GM	GAS METER
GMS	GALVANISED MILD STEEL
FU	FIXTURE UNITS
HER	HIGH END RISER
HT	HOSE TAP
H/D	HEAVY DUTY
HDPE	HIGH DENSITY POLYETHYLENE
HW	HOT WATER
HWU	HOT WATER UNIT
HWF	HOT WATER FLOW
HWR	HOT WATER RETURN
IL	INVERT LEVEL
IO	INSPECTION OPENING
NPCW	NON POTABLE COLD WATER
O/F	OVER FLOW
ORG	OVERFLOW RELIEF GULLY
PO	PLANTER OUTLET
RTD	RECESSED TUNDISH
RWO	RAINWATER OUTLET
RPZD	REDUCED PRESSURE ZONE DEVICE
RV	REFLUX VALVE
SD	SEWER DRAIN
SK	SINK
SL	SURFACE LEVEL
SMH	SEWER MANHOLE
SRM	SEWER RISING MAIN
SV	STOP VALVE
SVP	SEWER VENT PIPE
SW	STORMWATER
SWMH	STORMWATER MAN HOLE
SWRM	STORMWATER RISING MAIN
TD	TUNDISH
TD/AC	TUNDISH/AIR CON
TMV	THERMOSTATIC MIXING VALVE
TTD	TRAPPED TUNDISH
TW	TRADE WASTE
TWV	TRADE WASTE VENT
U/B	UNDER BENCH
uPVC	UNPLASTICISED POLYVINYL CHLORIDE
VJU	VERTICAL JUMP UP
VP	VENT PIPE
WM	WATER METER
WWF	WARM WATER FLOW
WWR	WARM WATER RETURN

LINETYPES

- SW — RAINWATER LINE
- SD — STORMWATER LINE

LEGEND

- ISOLATION VALVE
- ISOLATION VALVE IN PATH BOX
- BALL VALVE
- GATE VALVE
- GLOBE VALVE
- BUTTERFLY VALVE
- NON RETURN VALVE
- DOUBLE VALVE
- REDUCED PRESSURE ZONE DEVICE
- REFLUX VALVE
- FLAP VALVE
- GAS ISOLATION VALVE
- GAS PRESSURE REGULATOR VALVE
- PRESSURE REDUCING VALVE
- RATIO REDUCTION VALVE
- PRESSURE LIMITING VALVE
- PRESSURE RELIEF VALVE
- BALANCING VALVE
- FLOAT VALVE
- MONITORED VALVE
- SOLENOID VALVE
- FLOW SENSOR
- FLOW SWITCH
- PRESSURE SENSOR
- PRESSURE SWITCH
- TEMPERATURE SENSOR
- PRESSURE GAUGE
- TEMPERATURE GAUGE
- WC — WATER CLOSET
- UR — URINAL
- TD — TUNDISH
- TTD — TRAPPED TUNDISH
- SK — SINK
- ST — SILT TRAP
- SHR — SHOWER
- ORG — OVERFLOW RELIEF GULLY
- T — LAUNDRY TAB
- IO — INSPECTION OPENING
- IPMF — INDUCT PIPE MICA FLAP
- FW — FLOOR WASTE
- DT — DISCONNECTOR GULLY
- CO — CLEAROUT
- CS — CLEANER'S SINK
- BT/FW — BUCKET TRAP FLOOR WASTE
- BT — BOUNDARY TRAP
- BTH — BATH
- B — BASIN
- FLOW DIRECTION
- HOSE TAP RISE
- HT — HOSE TAP DROP TEE
- HT — HOSE TAP DROP
- WATER METER
- TV — TEMPERING VALVE
- TMV — THERMOSTATIC MIXING VALVE
- BWU — BOILING WATER UNIT
- GAS METER
- A — ACCESS TO TMV THIS SIDE
- BOX GUTTER
- GRATED TRENCH DRAIN
- DOWNPIPE SPREADER
- RWO — RAINWATER OUTLET
- PO — PLANTER OUTLET
- BO — BALCONY OUTLET
- RAINWATER HEAD
- GRATED STORMWATER PIT
- CONCRETE INFILL STORMWATER PIT
- IS — INSPECTION SHAFT
- SWMH — STORMWATER MANHOLE
- HY101 — DRAWING CONTINUATION
- 3 — REFER TO NUMBERED NOTE
- BOOSTER — BOOSTER

Status: FOR DA

No.	Date	Details
A	12.07.21	ISSUED FOR INFORMATION

Amendments

COORDINATED REFERENCE DRAWINGS			
SERVICE	DRAWING NUMBER	ISSUE	DATE
ARCH	-	-	-
MECH	-	-	-
STRUCT	-	-	-
ELEC	-	-	-
CIVIL	-	-	-

CONSULTANT
HYDROTEC CONSULTANTS PTY LTD
PO BOX 8EECROFT NSW 2119
M: 0409 327 679
E: info.hydrotec@gmail.com
ACN : 626 351 091
ABN : 30 626 351 091

DURIEDESIGN

Architect: ALCHEMY ARCHITECTS — ALCHEMY ARCHITECTS PTY LTD

Client: JAMIE DURIE

Project: 189 RIVERVIEW ROAD AVALON BEACH NSW 2107

Drawing: HYDRAULIC SERVICES LEGEND, SYMBOLS & NOTES

Project No.: MJ2134

Drawing No. [Revision]: HY-001 REV: A

Drawn: JBH | Date: - | Design: MH | Scale: NTS @ A1 | Size: A1 | Verified: MH

P:\PROJECTS\MJ2134\MJ2134 189 RIVERVIEW ROAD, AVALON BEACH\DWG\MJ2134\001.DWG

GARAGE ROOF AREA - 67.08m2

DWELLING LANDSCAPE ROOF - 444.05m2

DRIVEWAY AREA - 32.4m2

TOTAL - 543.53m2

PROPERTY - 1110.72m2

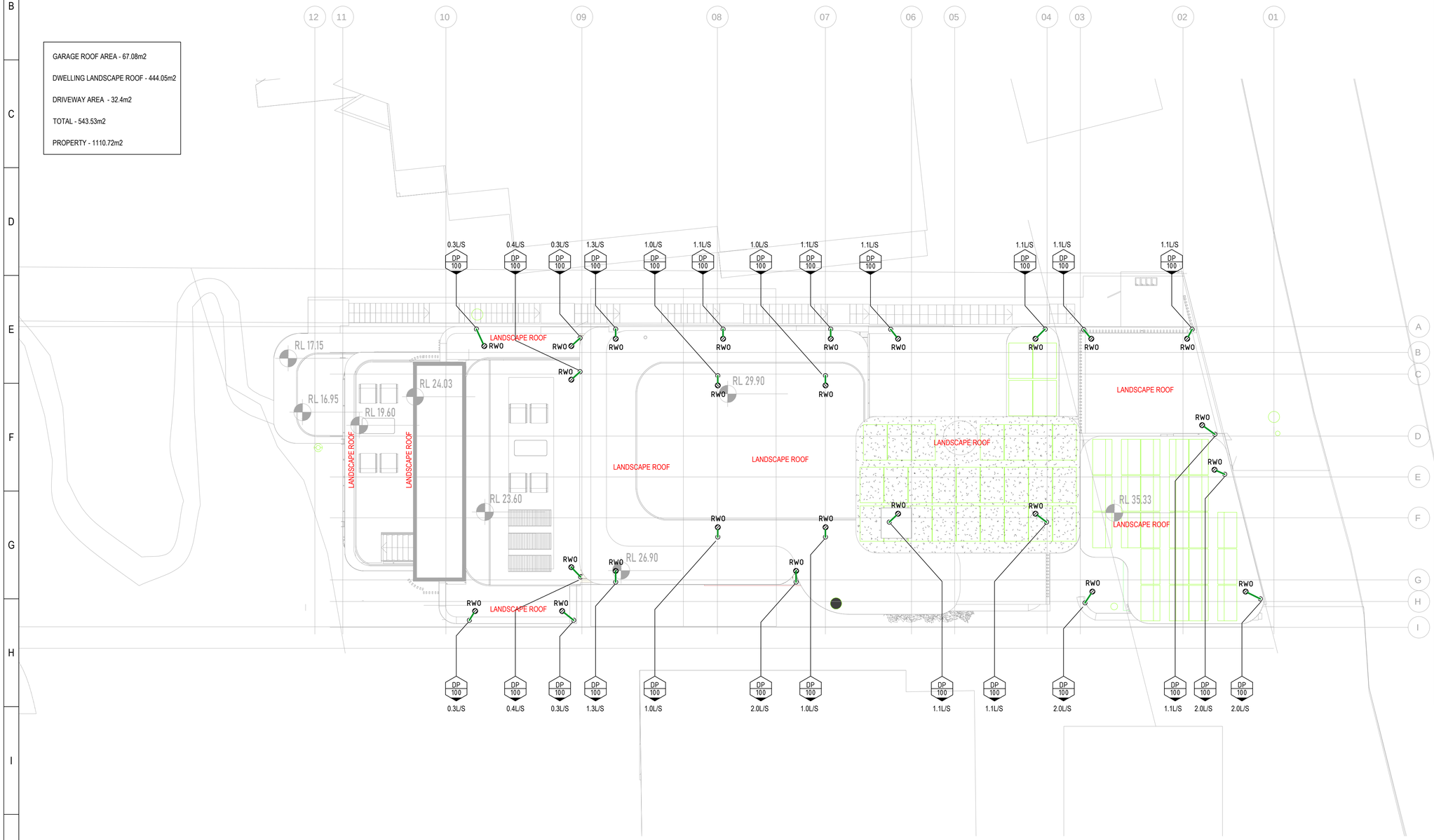

WARNING LOCATION AND DEPTH OF ALL SERVICES TO BE INVESTIGATED WITH THE RELEVANT AUTHORITIES PRIOR TO COMMENCING WORK

0 2 4 6 m

SCALE 1:100 @ A1

STORMWATER DRAINAGE NOTES

1. THE HYDRAULIC SERVICES CONTRACTOR SHALL SUPPLY INSTALL AND COMMISSION THE FULLY FUNCTIONAL AND COMPLIANT COMPLETE STORMWATER DRAINAGE SERVICE. PROVIDE ALL NECESSARY PIPE AND FITTINGS, JUNCTIONS, BENDS, PITS, INSPECTION OPENINGS, EXCAVATION AND SUNDRY EQUIPMENT TO CONVEY STORMWATER DISCHARGES FROM THE VARIOUS ROOF DOWNPIPES, TO THE POINT OF DISCHARGE TO COMPLETE INSTALLATION AS SHOWN ON THE DRAWINGS AND IN ACCORDANCE WITH MANUFACTURERS REQUIREMENTS AND RECOMMENDATIONS
2. THE STORMWATER DRAINAGE SERVICES INSTALLATION SHALL COMPLY WITH NCC VOL.3 PLUMBING CODE OF AUSTRALIA, AS/NZS3500.3 AND THE REQUIREMENTS OF THE CONTRACT.
3. STORMWATER DRAINAGE SHALL BE MINIMUM SIZE OF Ø100 AND INSTALL AT A GRADE OF 1:100 U.N.O
4. PROVIDE CLEANOUTS AT THE HEAD OF ALL STORMWATER DRAINS EMBEDMENT SHALL BE 20mm CRUSHED BLUE METAL AGGREGATE TO THE FULL HEIGHT OF THE WALL TO BE DRAINED

ROOF DRAINAGE AND DOWNPIPES

1. THE HYDRAULIC SERVICES CONTRACTOR SHALL SUPPLY, INSTALL AND COMMISSION THE FULLY FUNCTIONAL AND COMPLIANT COMPLETE ROOF, DRAINAGE AND ALL REQUIRED RAINWATER OUTLETS, OVERFLOWS AND DOWNPIPES. PROVIDE ALL NECESSARY PIPES, VALVES AND FITTINGS TO COMPLETE INSTALLATION.
2. THE ROOF DRAINAGE AND DOWNPIPES SERVICES INSTALLATION SHALL COMPLY WITH NCC VOL.3 PLUMBING CODE OF AUSTRALIA, AS/NZS3500.3, LOCAL COUNCIL REQUIREMENTS, MANUFACTURER'S REQUIREMENTS AND RECOMMENDATIONS AND THE REQUIREMENTS OF THE CONTRACT OF DOCUMENTATION AND THESE DRAWINGS.
3. THE ROOF RAINWATER SHALL BE COLLECTED AND DIRECTED TO THE NEW INFILTRATION TRENCH AS SHOWN.
4. THE HYDRAULIC SERVICES CONTRACTOR SHALL MAKE APPLICATION AND PAY ALL FEES AND CHARGES, NEGOTIATE WITH THE AUTHORITY FOR THE SUPPLY OF THE CONNECTION AS INDICATED ON THE DRAWINGS, COMPLETE WITH ALL VALVES AND FITTINGS REQUIRED.

REUSE RAINWATER SERVICES

1. IT IS PROPOSED THAT THE POTABLE WATER FOR FLUSHING AND WASH DOWN WILL BE CONNECTED TO A REUSE WATER - TREATED PIPEWORK SYSTEM READY FOR FUTURE CONNECTION. ALL PIPEWORK SHALL BE INSTALLED WITH LILAC STRIPED / SLEEVE FOR FUTURE RE-CONNECTION TO RECYCLED / REUSE WATER.

MATERIALS AND COMPONENTS

1. PIPEWORK MATERIALS FOR THE HYDRAULIC SERVICES SHALL BE IN ACCORDANCE WITH THE FOLLOWING:

- STORMWATER DRAINAGE - UPVC-DWV SN8(min)

TRENCHING

EXCAVATION:

1. EXCAVATE FOR THE UNDERGROUND SERVICES, TO REQUIRED LINES, LEVELS AND GRADES. GENERALLY, MAKE THE TRENCHES STRAIGHT BETWEEN PERSONNEL ACCESS WAYS, INSPECTION POINTS AND JUNCTIONS, WITH VERTICAL SIDES AND UNIFORM GRADES.

EMBEDMENT:

1. NOT WITHSTANDING THE LOCAL REQUIREMENTS, SAND BEDDING MATERIAL SHALL BE A COURSE, RIVER (QUARTZ BASED) SAND, FREE FROM ORGANIC MATTER, SOLUBLE SALTS AND OTHER DELETERIOUS MATERIALS.
2. AFTER EXCAVATION OF THE TRENCH SAND EMBEDMENT SHALL BE PLACED AND COMPACTED AROUND THE PIPE AS PER REGULATIONS AND RELEVANT STANDARDS TO A MINIMUM HEIGHT OF 150mm ABOVE THE TOP OF THE PIPE AND/OR FITTINGS. WHERE TRENCH MARKER TAPE IS REQUIRED SAND EMBEDMENT SHALL BE BROUGHT UP TO THE DEPTH OF THE MARKER TAPE.
3. APPROVED BEDDING, SURROUND AND SELECT FILL SHALL BE COMPACTED TO 90% MAXIMUM DRY DENSITY IN ACCORDANCE WITH AS1289 PART 5.1.1 AND 70% DENSITY DETERMINED IN ACCORDANCE WITH AS 1289 PART E.6.1

TRENCH FILL

1. BACKFILL SERVICE TRENCHES AS SOON AS POSSIBLE AFTER THE SERVICE HAS BEEN LAID, BEDDED, OVERLAY PLACED, AND INSPECTED WHERE REQUIRED BY THE LOCAL AUTHORITY AND SUPERINTENDENT, IF POSSIBLE ON THE SAME WORKING DAY. PLACE THE TRENCH FILL IN LAYERS 150mm THICK AND COMPACT TO THE DENSITY WHICH APPLIES TO THE LOCATION OF THE TRENCHES TO MINIMISE SETTLEMENT, AND SO THAT PIPES ARE BUTTRESSED BY THE TRENCH WALLS.
2. COMPACT TRENCH FILL TO A MINIMUM OF 95% OF THE STANDARD MAXIMUM DRY DENSITY SPECIFIED IN AS 1289.5.4.1 OR AS 1289.E.6.1. COMPACT TRENCH FILL IN SUCH A MANNER THAT THE PIPES ARE NEITHER DISLODGED NOR DAMAGED.
3. TRENCH FILL SHALL HAVE NO STONES GREATER THEN 25mm OCCURRING WITHIN 150mm OF THE SERVICE. WELL GRADED, INORGANIC, NON-PERISHABLE MATERIAL SHALL BE USED.
4. UNDER ROADS AND PAVED AREAS, COURSE SAND, CONTROLLED LOW STRENGTH MATERIAL OR FINE CRUSHER DUST SHALL BE USED TO BACKFILL THE TOTAL HEIGHT OF THE TRENCH.

Status

FOR DA

No.	Date	Details
B	19.07.21	RE-ISSUED FOR INFORMATION
A	12.07.21	ISSUED FOR INFORMATION

Amendments

COORDINATED REFERENCE DRAWINGS			
SERVICE	DRAWING NUMBER	ISSUE	DATE
ARCH			
STRUCT			
MECH			
ELEC			
CIVIL			

CONSULTANT
HYDROTEC CONSULTANTS PTY LTD
PO BOX 8SECROFT NSW 2178
M: 0409 327 678
E: info.hydrotec@gmail.com
ACN : 625 351 091
ABN : 30 625 351 091

DURIEDESIGN

Architect: ALCHEMY ARCHITECTS — ALCHEMY ARCHITECTS PTY LTD

Client: JAMIE DURIE

Project: 189 RIVERVIEW ROAD AVALON BEACH NSW 2107

Drawing: HYDRAULIC SERVICES STORMWATER DRAINAGE ROOF LAYOUT

Project No. MJ2134

Drawing No. [Revision]: HY-100 REV: B

Drawn: JBH | Date:

Design: MH | Scale: 1:100 @ A1 | Size: A1

Verified: MH

NORTH

P:\PROJECTS\MJ2134\MJ2134 189 RIVERVIEW ROAD AVALON BEACH\DRAWINGS\HY100.DWG

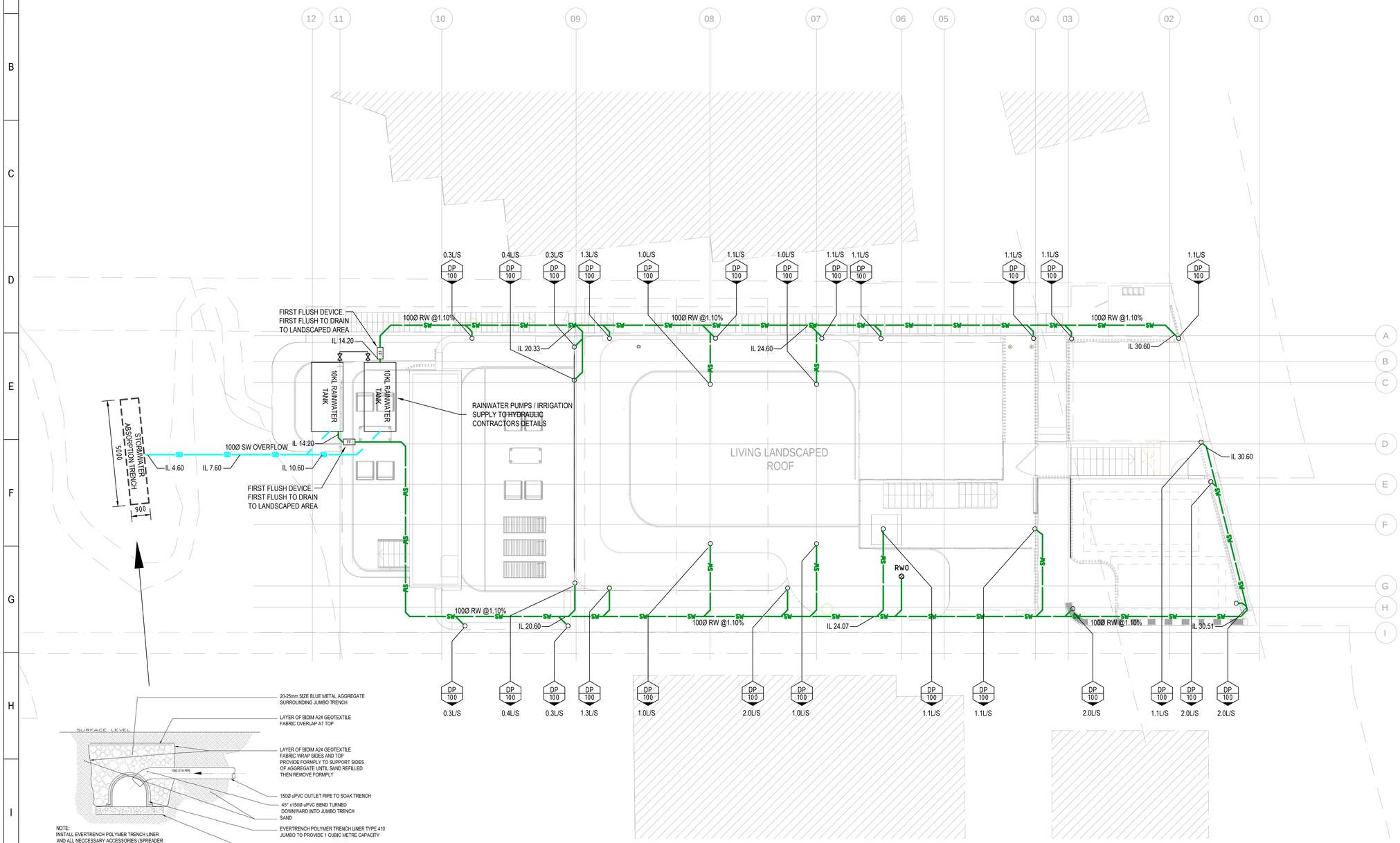

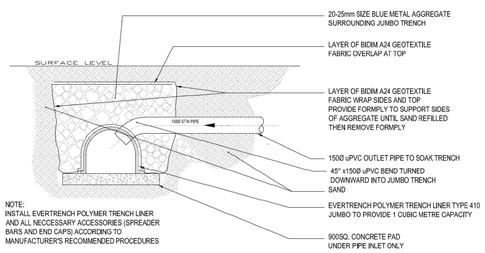

NOTE:
INSTALL EVERTRENCH POLYMER TRENCH LINER
AND ALL NECCESSARY ACCESSORIES (SPREADER
BARS AND END CAPS) ACCORDING TO
MANUFACTURER'S RECOMMENDED PROCEDURES

SECTIONAL ELEVATION
INFILTRATION TRENCH
N.T.S

WARNING LOCATION AND DEPTH OF ALL SERVICES TO BE INVESTIGATED WITH THE RELEVANT AUTHORITIES PRIOR TO COMMENCING WORK

0 2 4 6 m
SCALE 1:100 @ A1

STORMWATER DRAINAGE NOTES
1. THE HYDRAULIC SERVICES CONTRACTOR SHALL SUPPLY INSTALL AND COMMISSION THE FULLY FUNCTIONAL AND COMPLIANT COMPLETE STORMWATER DRAINAGE SERVICE. PROVIDE ALL NECESSARY PIPE AND FITTINGS, JUNCTIONS, BENDS, PITS, INSPECTION OPENINGS, EXCAVATION AND SUNDRY EQUIPMENT TO CONVEY STORMWATER DISCHARGES FROM THE VARIOUS ROOF DOWNPIPES, TO THE POINT OF DISCHARGE TO COMPLETE INSTALLATION AS SHOWN ON THE DRAWINGS AND IN ACCORDANCE WITH MANUFACTURERS REQUIREMENTS AND RECOMMENDATIONS
2. THE STORMWATER DRAINAGE SERVICES INSTALLATION SHALL COMPLY WITH NCC VOL.3 PLUMBING CODE OF AUSTRALIA, AS/NZS3500.3 AND THE REQUIREMENTS OF THE CONTRACT.
3. STORMWATER DRAINAGE SHALL BE MINIMUM SIZE OF Ø100 AND INSTALL AT A GRADE OF 1:100 U.N.O
4. PROVIDE CLEANOUTS AT THE HEAD OF ALL STORMWATER DRAINS EMBEDMENT SHALL BE 20mm CRUSHED BLUE METAL AGGREGATE TO THE FULL HEIGHT OF THE WALL TO BE DRAINED

ROOF DRAINAGE AND DOWNPIPES
1. THE HYDRAULIC SERVICES CONTRACTOR SHALL SUPPLY, INSTALL AND COMMISSION THE FULLY FUNCTIONAL AND COMPLIANT COMPLETE ROOF, DRAINAGE AND ALL REQUIRED RAINWATER OUTLETS, OVERFLOWS AND DOWNPIPES. PROVIDE ALL NECESSARY PIPES, VALVES AND FITTINGS TO COMPLETE INSTALLATION.
2. THE ROOF DRAINAGE AND DOWNPIPES SERVICES INSTALLATION SHALL COMPLY WITH NCC VOL.3 PLUMBING CODE OF AUSTRALIA, AS/NZS3500.3, LOCAL COUNCIL REQUIREMENTS, MANUFACTURER'S REQUIREMENTS AND RECOMMENDATIONS AND THE REQUIREMENTS OF THE CONTRACT OF DOCUMENTATION AND THESE DRAWINGS.
3. THE ROOF RAINWATER SHALL BE COLLECTED AND DIRECTED TO THE NEW INFILTRATION TRENCH AS SHOWN.
4. THE HYDRAULIC SERVICES CONTRACTOR SHALL MAKE APPLICATION AND PAY ALL FEES AND CHARGES, NEGOTIATE WITH THE AUTHORITY FOR THE SUPPLY OF THE CONNECTION AS INDICATED ON THE DRAWINGS, COMPLETE WITH ALL VALVES AND FITTINGS REQUIRED.

REUSE RAINWATER SERVICES
1. IT IS PROPOSED THAT THE POTABLE WATER FOR FLUSHING AND WASH DOWN WILL BE CONNECTED TO A REUSE WATER - TREATED PIPEWORK SYSTEM READY FOR FUTURE CONNECTION. ALL PIPEWORK SHALL BE INSTALLED WITH LILAC STRIPED / SLEEVE FOR FUTURE RE-CONNECTION TO RECYCLED / REUSE WATER.

MATERIALS AND COMPONENTS
1. PIPEWORK MATERIALS FOR THE HYDRAULIC SERVICES SHALL BE IN ACCORDANCE WITH THE FOLLOWING:
- STORMWATER DRAINAGE - UPVC-DWV SN8(min)

TRENCHING

EXCAVATION:
1. EXCAVATE FOR THE UNDERGROUND SERVICES, TO REQUIRED LINES, LEVELS AND GRADES. GENERALLY, MAKE THE TRENCHES STRAIGHT BETWEEN PERSONNEL ACCESS WAYS, INSPECTION POINTS AND JUNCTIONS, WITH VERTICAL SIDES AND UNIFORM GRADES.

EMBEDMENT:
1. NOT WITHSTANDING THE LOCAL REQUIREMENTS, SAND BEDDING MATERIAL SHALL BE A COURSE, RIVER (QUARTZ BASED) SAND, FREE FROM ORGANIC MATTER, SOLUBLE SALTS AND OTHER DELETERIOUS MATERIALS.
2. AFTER EXCAVATION OF THE TRENCH SAND EMBEDMENT SHALL BE PLACED AND COMPACTED AROUND THE PIPE AS PER REGULATIONS AND RELEVANT STANDARDS TO A MINIMUM HEIGHT OF 150mm ABOVE THE TOP OF THE PIPE AND/OR FITTINGS. WHERE TRENCH MARKER TAPE IS REQUIRED SAND EMBEDMENT SHALL BE BROUGHT UP TO THE DEPTH OF THE MARKER TAPE.
3. APPROVED BEDDING, SURROUND AND SELECT FILL SHALL BE COMPACTED TO 90% MAXIMUM DRY DENSITY IN ACCORDANCE WITH AS1289 PART 5.1.1 AND 70% DENSITY DETERMINED IN ACCORDANCE WITH AS 1289 PART E.6.1

TRENCH FILL
1. BACKFILL SERVICE TRENCHES AS SOON AS POSSIBLE AFTER THE SERVICE HAS BEEN LAID, BEDDED, OVERLAY PLACED, AND INSPECTED WHERE REQUIRED BY THE LOCAL AUTHORITY AND SUPERINTENDENT, IF POSSIBLE ON THE SAME WORKING DAY. PLACE THE TRENCH FILL IN LAYERS 150mm THICK AND COMPACT TO THE DENSITY WHICH APPLIES TO THE LOCATION OF THE TRENCHES TO MINIMISE SETTLEMENT, AND SO THAT PIPES ARE BUTTRESSED BY THE TRENCH WALLS.
2. COMPACT TRENCH FILL TO A MINIMUM OF 95% OF THE STANDARD MAXIMUM DRY DENSITY SPECIFIED IN AS 1289.5.4.1 OR AS 1289.E.6.1. COMPACT TRENCH FILL IN SUCH A MANNER THAT THE PIPES ARE NEITHER DISLODGED NOR DAMAGED.
3. TRENCH FILL SHALL HAVE NO STONES GREATER THEN 25mm OCCURRING WITHIN 150mm OF THE SERVICE. WELL GRADED, INORGANIC, NON-PERISHABLE MATERIAL SHALL BE USED.
4. UNDER ROADS AND PAVED AREAS, COURSE SAND, CONTROLLED LOW STRENGTH MATERIAL OR FINE CRUSHER DUST SHALL BE USED TO BACKFILL THE TOTAL HEIGHT OF THE TRENCH.

Status
FOR DA

No.	Date	Details
C	19.07.21	RE-ISSUED FOR INFORMATION
B	13.07.21	ISSUED FOR INFORMATION
A	12.07.21	ISSUED FOR INFORMATION

Amendments

COORDINATED REFERENCE DRAWINGS

SERVICE	DRAWING NUMBER	ISSUE	DATE
ARCH			
MECH			
STRUCT			
ELEC			
CIVIL			

CONSULTANT
HYDROTEC CONSULTANTS PTY LTD
PO BOX 8BECROFT NSW 2119
M: 0409 327 679
E: info.hydrotec@gmail.com
ACN : 625 351 091
ABN : 36 625 351 091

DURIEDESIGN

Architect
ALCHEMY ARCHITECTS
ALCHEMY ARCHITECTS PTY LTD

Client
JAMIE DURIE

Project
189 RIVERVIEW ROAD
AVALON BEACH
NSW 2107

Drawing
HYDRAULIC SERVICES
STORMWATER
INGROUND DRAINAGE
LAYOUT

Project No.	MJ2134
Drawing No. [Revision]:	HY-101 REV: C
Drawn: JBH	Date:
Design: MH	Scale: 1:100 @ A1
Verified: MH	Size: A1

NORTH

P:\PROJECTS\MJ2134\MJ2134 189 RIVERVIEW ROAD AVALON BEACH\DRAWINGS\HY101.DWG

EROSION AND SEDIMENT CONTROL NOTES

GENERAL INSTRUCTIONS

E1. THIS PLAN IS TO BE READ IN CONJUNCTION WITH THE ENGINEERING PLANS, AND ANY OTHER PLANS OR WRITTEN INSTRUCTIONS THAT MAY BE ISSUED AND RELATING TO DEVELOPMENT AT THE SUBJECT SITE.

E2. THE SITE SUPERINTENDENT WILL ENSURE THAT ALL SOIL AND WATER MANAGEMENT WORKS ARE LOCATED AS INSTRUCTED IN THIS SPECIFICATION.

E3. ALL BUILDERS AND SUB-CONTRACTORS WILL BE INFORMED OF THEIR RESPONSIBILITIES IN MINIMISING THE POTENTIAL FOR SOIL EROSION AND POLLUTION TO DOWNSLOPE LANDS AND WATERWAYS.

CONSTRUCTION SEQUENCE

E4. THE SOIL EROSION POTENTIAL ON THIS SITE SHALL BE MINIMISED. HENCE WORKS SHALL BE UNDERTAKEN IN THE FOLLOWING SEQUENCE :

(a) INSTALL SEDIMENT FENCES

(b) UNDERTAKE SITE DEVELOPMENT WORKS IN ACCORDANCE WITH THE ENGINEERING PLANS. PHASE DEVELOPMENT SO THAT LAND DISTURBANCE IS CONFINED TO AREAS OF WORKABLE SIZE.

EROSION CONTROL

E5. DURING WINDY CONDITIONS, LARGE, UNPROTECTED AREAS WILL BE KEPT MOIST (NOT WET) BY SPRINKLING WITH WATER TO KEEP DUST UNDER CONTROL.

E6. FINAL SITE LANDSCAPING WILL BE UNDERTAKEN AS SOON AS POSSIBLE AND WITHIN 20 WORKING DAYS FROM COMPLETION OF CONSTRUCTION ACTIVITIES.

FENCING

E7. STOCKPILES WILL NOT BE LOCATED WITHIN 2 METRES OF HAZARD AREAS, INCLUDING LIKELY AREAS OF CONCENTRATED OR HIGH VELOCITY FLOWS SUCH AS WATERWAYS. WHERE THEY ARE BETWEEN 2 AND 5 METRES FROM SUCH AREAS, SPECIAL SEDIMENT CONTROL MEASURES SHOULD BE TAKEN TO MINIMISE POSSIBLE POLLUTION TO DOWNSLOPE WATERS, E.G. THROUGH INSTALLATION OF SEDIMENT FENCING.

E8. ANY SAND USED IN THE CONCRETE CURING PROCESS (SPREAD OVER THE SURFACE) WILL BE REMOVED AS SOON AS POSSIBLE AND WITHIN 10 WORKING DAYS FROM PLACEMENT.

E9. WATER WILL BE PREVENTED FROM ENTERING THE PERMANENT DRAINAGE SYSTEM UNLESS IT IS RELATIVELY SEDIMENT FREE, I.E. THE CATCHMENT AREA HAS BEEN PERMANENTLY LANDSCAPED AND/OR ANY LIKELY SEDIMENT HAS BEEN FILTERED THROUGH AN APPROVED STRUCTURE.

E10. TEMPORARY SOIL AND WATER MANAGEMENT STRUCTURES WILL BE REMOVED ONLY AFTER THE LANDS THEY ARE PROTECTING ARE REHABILITATED.

OTHER MATTERS

E11. ACCEPTABLE RECEPTORS WILL BE PROVIDED FOR CONCRETE AND MORTAR SLURRIES, PAINTS, ACID WASHINGS, LIGHT-WEIGHT WASTE MATERIALS AND LITTER.

E12. RECEPTORS FOR CONCRETE AND MORTAR SLURRIES, PAINTS, ACID WASHINGS, LIGHT-WEIGHT WASTE MATERIALS AND LITTER ARE TO BE EMPTIED AS NECESSARY. DISPOSAL OF WASTE SHALL BE IN A MANNER APPROVED BY THE SITE SUPERINTENDENT.

SITE INSPECTION & MAINTENANCE

E.13. EROSION AND SEDIMENT CONTROL MEASURES SHALL BE INSPECTED AFTER RAINFALL EVENTS TO ENSURE THAT THEY OPERATE EFFECTIVELY. REPAIR AND OR MAINTENANCE SHALL BE UNDERTAKEN AS REQUIRED.

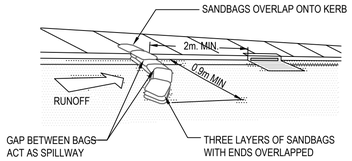

SANDBAG KERB INLET SEDIMENT TRAP
N.T.S.

MAINTENANCE
THE ENTRANCE SHALL BE MAINTAINED IN A CONDITION WHICH PREVENTS TRACKING OR FLOWING OF SEDIMENT ONTO PUBLIC RIGHTS OF WAY. THIS MAY REQUIRE PERIODIC TOP DRESSING WITH ADDITIONAL GRAVEL AS CONDITIONS DEMAND AND REPAIR AND / OR CLEANOUT OF ANY MEASURES USED TO TRAP SEDIMENT. ALL SEDIMENT SPILLED, DROPPED, WASHED OR TRACKED ONTO PUBLIC RIGHTS OF WAY MUST BE REMOVED IMMEDIATELY.

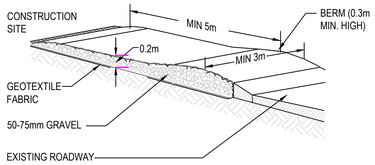

TEMPORARY CONSTRUCTION EXIT
N.T.S.

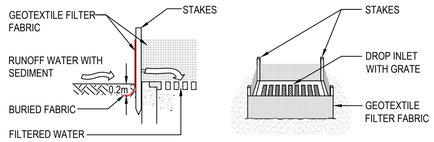

GEOTEXTILE FILTER FABRIC DROP INLET SEDIMENT TRAP
N.T.S.

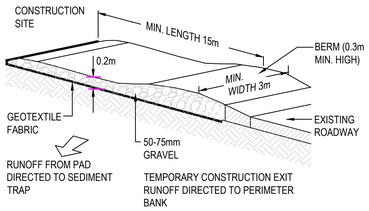

VEHICLE SHAKER PAD
N.T.S.

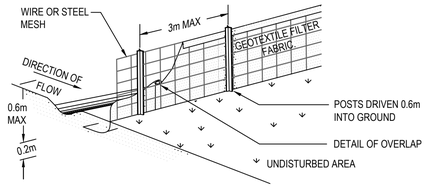

SEDIMENT FENCE
N.T.S.

1 - GENERAL NOTES AND DETAILS
N.T.S.

SOIL & WATER MANAGEMENT NOTES

1. REFER TO DETAIL FOR CONSTRUCTION OF SEDIMENT FENCE.
2. ALL PITS & PIPEWORK ASSOCIATED WITH PROPOSED DRAINAGE SYSTEMS SHALL BE KEPT FREE OF SOIL, WATER & DEBRIS FOR THE DURATION OF THE CONSTRUCTION WORKS.
3. ALL LOOSE IMPORTED FILL AND EXCAVATED MATERIAL SHALL BE STOCKPILED AS FAR AS POSSIBLE FROM SEDIMENT FENCES PRIOR TO FINAL PLACEMENT, COMPACTION OR REMOVAL FROM SITE.
4. EXCESSIVE SEDIMENT BUILT UP SHALL BE AVOIDED BY REGULAR MAINTENANCE OF SEDIMENT FENCES.
5. WHERE APPLICABLE, APPROVAL LANDSCAPING & REVEGETATION OF DISTURBED AREAS SHALL COMMENCE AT THE EARLIEST OPPORTUNITY AFTER COMPLETION OF EATHWORKS OPERATIONS.

NOTE
CONSTRUCTION OF SEDIMENT FENCE AND ANY OTHER SEDIMENT CONTROL MEASURES SHALL BE IN ACCORDANCE WITH THE URBAN EROSION AND SEDIMENT CONTROL HANDBOOK BY THE DEPARTMENT OF CONSERVATION AND LAND MANAGEMENT (AVAILABLE FROM THE DEPARTMENT OF LAND AND WATER CONSERVATION)

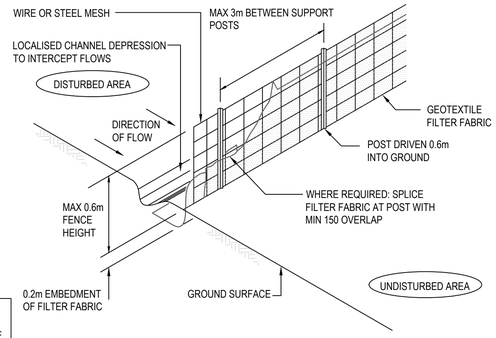

NOTE:
SPOIL ON SITE TO BE PROGRESSIVELY REMOVED. NO STOCKPILE OF WASTE MATERIAL ON SITE.

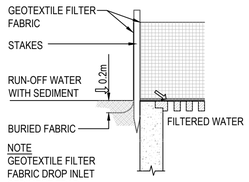

NOTE
GEOTEXTILE FILTER FABRIC DROP INLET SEDIMENT TRAP

SECTION VIEW

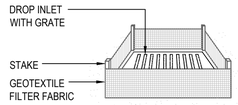

FRONT VIEW

2 - SEDIMENT FENCE
N.T.S.

DESIGN PARAMETERS FOR SEDIMENT FENCE

MAX DRAINAGE AREA = 0.6000ha
MAX SLOPE GRADIENT = 50%
MAX SLOPE LENGTH = 60m

SOIL WATER & SEDIMENT RUNOFF MANAGEMENT NOTES:

1. SITE WATER & SEDIMENT RUNOFF MANAGEMENT SHALL BE PROVIDED TO MINIMISE THE AMOUNT OF DIRTY WATER & SEDIMENT THAT REACHES THE COUNCIL STORMWATER SYSTEM, & THAT WILL DETRIMENTALLY AFFECT WATER QUALITY, RIPARIAN VEGETATION & HABITAT & AQUATIC ENVIRONMENT.
2. SITE DRAINAGE, SEDIMENT & EROSION CONTROL MEASURES, SHALL BE IMPLEMENTED PRIOR TO COMMENCEMENT OF WORKS.
3. PERMANENT BENCHMARK IS TO BE ESTABLISHED ON THE SITE & OUTSIDE THE AREA OF WORKS & RESTORATION.
4. ANY VEGETATION OR OTHER MATERIAL REMOVED FROM THE AREA OF OPERATIONS SHALL BE DISPOSED OF TO THE PROPOSED TEMPORARY STOCKPILE SO THAT IT CANNOT BE SWEPT BACK INTO THE STORMWATER SYSTEM DURING A FLOOD.
5. ANY EXCESS EXCAVATED MATERIAL SHALL BE TRANSPORTED FROM THE AREA OF OPERATIONS & DISPOSED OF LAWFULLY.
6. ALL EROSION & SEDIMENT CONTROL MEASURES AT THE SITE ARE TO BE INSPECTED & MAINTAINED AS REQUIRED ON A WEEKLY BASIS & IMMEDIATELY FOLLOWING ANY RAINFALL EVENTS TO ENSURE THE EFFICIENT OPERATION OF THESE DEVICES. THIS OBLIGATION REMAINS UNTIL SITE HAS BEEN FULLY STABILISED.
7. DECOMMISSIONING OF ALL SEDIMENT & EROSION CONTROLS MUST MEET THE REQUIREMENTS OUTLINED IN THE NSW DEPARTMENT OF HOUSING'S PUBLICATION MANAGING URBAN STORMWATER: SOIL & CONSTRUCTION (3RD Ed.-1998).
8. ALL SEDIMENT & EROSION CONTROL MEASURES ARE TO FOLLOW CURRENT ENGINEERING STANDARDS & BE IN ACCORDANCE WITH THE VEGETATION MANAGEMENT PLAN, DEPARTMENT OF HOUSING 'BLUE BOOK' MANAGING URBAN STORMWATER-SOILS & CONSTRUCTION, ALL EROSION & SEDIMENT CONTROLS ARE TO MEET THE REQUIREMENTS OF THE ENVIRONMENTAL PROTECTION AUTHORITY, NSW FISHERIES & ..... COUNCIL.
9. ALLOW FOR ALL NECESSARY FLOCCULATES & PLANT TO PROCESS CONTAMINATED WATER CREATED DURING BULK EXCAVATION ACTIVITIES.

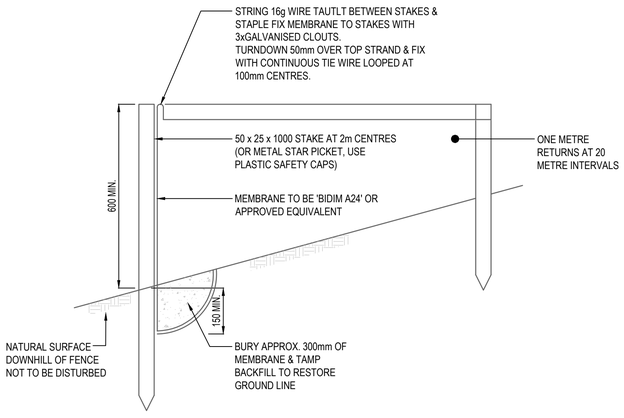

3 - SILT FENCE DETAIL
N.T.S.

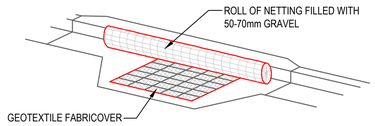

NOTE:
FOR USE ONLY DURING CONSTRUCTION PHASE, TO BE REMOVED ONCE ROAD IS OPEN TO TRAFFIC, NOT TO BE USED ON SAG GULLIES.

4 - KERB INLET PROTECTION GULLIES ON GRADE
N.T.S

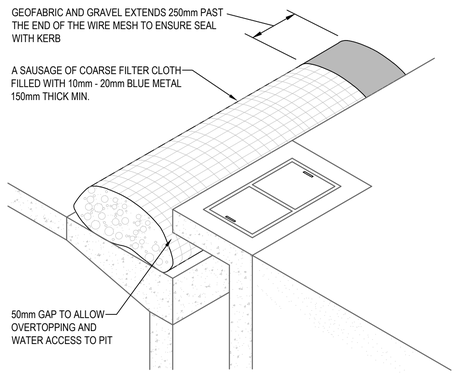

5 - KERB INLET PIT CONTROL
N.T.S.

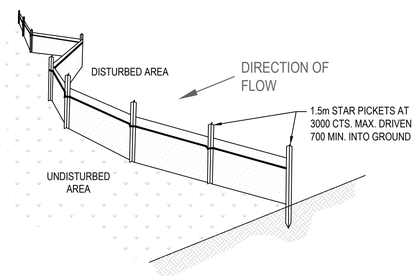

6 - TYPICAL SILT FENCE DETAIL
N.T.S.
PROVIDE 1m RETURNS AT 30m INTERVALS. (TYPICAL)

Status: FOR DA

No.	Date	Details
A	12.07.21	ISSUED FOR INFORMATION

Amendments

COORDINATED REFERENCE DRAWINGS			
SERVICE	DRAWING NUMBER	ISSUE	DATE
ARCH	-	-	-
MECH	-	-	-
STRUCT	-	-	-
ELEC	-	-	-
CIVIL	-	-	-

CONSULTANT
HYDROTEC CONSULTANTS PTY LTD
PO BOX 3683CROFT NSW 2119
M: 0409 327 619
E: info.hydrotecs@gmail.com
ACN : 625 351 091
ABN : 30 625 351 091

DURIEDESIGN

Architect: ALCHEMY ARCHITECTS PTY LTD

Client: JAMIE DURIE

Project: 189 RIVERVIEW ROAD AVALON BEACH NSW 2107

Drawing: HYDRAULIC SERVICES SEDIMENT CONTROL PLAN DETAILS

Project No.: MJ2134
Drawing No. [Revision]: HY-201 REV: A
Drawn: JBH
Date:
Design: MH
Scale: NTS
Size: A1
Verified: MH

P:\PROJECTS\MJ2134\MJ2134 189 RIVERVIEW ROAD, AVALON BEACH\DRAWINGS\HZ01.DWG