DO NOT SCALE FROM DRAWINGS - USE ONLY FIGURED DIMENSIONS

1.0 GENERAL

1.1 These drawings shall be read in conjunction with the architectural and other consultants' drawings / specifications and with other such written instructions as may be issued during the construction. Any discrepancy shall be referred to the Engineer before commencing the work.
1.2 All dimensions are in millimeters, UNO (unless noted otherwise).
1.3 These drawings shall not be scaled, refer to dimensions given only or refer to the Architectural drawings.
1.4 All levels and setting out dimensions shown on the drawings shall be checked on site prior to the commencement of the work.
1.5 During construction the structure shall be maintained in a stable condition with no part being overstressed with temporary bracing installed as required.
1.6 The engineer shall approve any proposed substitution prior to the commencement of work.

2.0 LOADING

2.1 Superimposed loads are in accordance with AS 1170.1 or as shown in note L4.
2.2 Wind loads are in accordance with AS 1170.2 as follows:
Region : A Basic Wind Velocity, Vp : 41 m/s Category : N2 (W33)
2.3 Earthquake loads are in accordance with AS 1170.4 as follows:
a = 0.08 S = 1.0 I = 1.0
2.4 Element superimposed loading:

Element	Live Load (kPa)	Dead Load (kPa)
Floors - Internal	1.50	-
Floors - External & Garage	3.00	-
Roof Areas	0.25	-

2.5 Assumed site soil classification is: Class P

3.0 EARTHWORKS

3.1 The earthworks shall be carried out in accordance with the geotechnical report reference by
3.2 The site shall be stripped a minimum depth of 150 mm under pavements and buildings to remove the topsoil. Any remaining uncontrolled fill material, organic material, refuse or roots shall be removed.
3.3 The subgrade shall be inspected and approved by the geotechnical engineer.
3.4 The excavated subgrade shall be proof rolled a minimum of six (6) passes using a vibrating drum roller with a minimum deadweight of 10 tonnes. Any soft, wet and unsuitable spots shall be removed and reinstated using approved material.
3.5 The subgrade shall be compacted to not less than 100% standard dry density ratio within ±2% of the optimum moisture content in accordance with AS1289.
3.6 Where fill is required to achieve subgrade level it shall be approved ripped sandstone having a maximum particle size of 75 mm. It shall be placed in loose layers no thicker than 300 mm and compacted to not less than 100% standard dry density ratio within ±2% of the optimum moisture content in accordance with AS1289.
3.7 If a vibrating type roller is used, consideration shall be given to the effects on adjacent properties.
3.8 All batters shall be a minimum of 1:2 for temporary batters and 1:4 for final batters in clay material.
3.9 All filling shall be under the supervision of the project geotechnical engineer who shall provide compaction certificates to the engineer for approval.

4.0 FOUNDATION MATERIAL

4.1 Strip & pad footings have been designed for an allowable end bearing value of 150 kPa in stiff material.
4.2 Bored piers have been designed for an allowable end bearing value of 500 kPa & a skin friction of 50 kPa off rock.
4.3 The foundation material shall be inspected & approved in writing by the geotechnical engineer for the above allowable bearing capacities.
4.4 Slabs on ground have been design for a CBR of 5 in accordance with the Cement & Concrete Association Industrial Floors & Pavement Handbook.
4.5 Footings shall be located centrally under walls & columns UNO.

5.0 REINFORCED CONCRETE

5.1 All workmanship and materials shall be in accordance with AS 3600, except where varied by the project documentation.
5.2 Concrete quality shall be as follows (subject to note C4 being satisfied), UNO:

Element	Slump (mm)	Maximum Aggregate size (mm)	Cement Type	Strength 28 Days (MPa)	Admixture
Footings	80	20	Normal Portland Type A Cement	25	-
Bored Piers & Pile Caps	80	20		25	-
Floor Slabs on Ground	80	20		25	-
Suspended Floor Slabs	80	20		32	-
Hollowcore Floor Slabs	80	20		32	-
Walls & Columns	80	20		32	-

5.3 The engineer shall approve any admixtures to be used in the concrete mix.
5.4 The clear concrete cover to all reinforcement shall be as follows, UNO:

Exposure Classification to AS 3600	Strength 28 Days (MPa)	Against Formwork		Against Ground	
		Interior Surface	Exterior Surface	With Membrane	With No Membrane
A1	20	20	30	30	50
A2	25	40	30	40	50
B1	32	40	40		
B2	40	45	45		

5.5 Cover to reinforcement shall be obtained by the use of approved bar chairs placed at maximum 750 mm centers in each direction.
5.6 All concrete shall be mechanically vibrated and the vibrators SHALL NOT be used to spread the concrete.
5.7 Sizes of the concrete elements do not include thickness of the applied final finishes.
5.8 Approval shall be obtained from the engineer prior to the drilling of any holes or cutting in of any chases other than those shown on the structural drawings.
5.9 Construction joints where not shown on the structural drawings shall be located in accordance with the engineers approval.
5.10 Curing of all concrete is to be achieved by keeping surfaces continuously wet for a period of 7 days (10 days in summer months), and prevention of loss of moisture for a total of 10 days followed by gradual drying out. Approved sprayed on compounds complying with AS3799 may be used provided that they do not interfere with the performance of the proposed floor finishes. Polythene sheeting or wet hessian may be used if protected from wind and traffic.
5.11 The suspended slabs shall be propped until 28 day strength has been achieved for slabs. The formwork may be removed once 20 MPa strength has been achieved, however the slab will need to be back propped until 28 day strength has been achieved. No masonry or partition walls are to be constructed on suspended levels until all propping is removed.
5.12 Conduits, pipes, etc. shall only be placed in the middle third of the slab depth and spaced at not less than 3 diameters. They shall not be placed within the cover of the reinforcement.
5.13 Reinforcement symbols:
S - Denotes grade 250 S bars to AS1302.
N - Denotes grade 500 normal ductility deformed bars to AS4671.
R - Denotes grade 250 normal ductility round bars to AS4671.
SL - Denotes grade 500 low ductility square welded mesh to AS4671.
RL - Denotes grade 500 low ductility rectangular welded mesh to AS4671.
L - Denotes grade 500 low ductility trench welded mesh to AS4671.
5.14 Reinforcement is represented diagrammatically and is not necessarily shown in true projection.
5.15 Splices in reinforcement shall be made only in positions shown or otherwise approved by the engineer.
5.16 Laps and cogs shall be in accordance with AS3600 and not less than the below:

	Minimum Splice Lengths	Minimum Overall Cog Lengths
N12	400 mm	200 mm
N16	600 mm	225 mm
N20	800 mm	275 mm
N24	1100 mm	325 mm
N28	1400 mm	375 mm

5.17 Site bending of deformed reinforcing bars shall be done without heating and using mechanical bending tools.
5.18 Welding of the reinforcement shall not be permitted unless shown on the structural drawings or approved by the engineer.
5.19 Joggles to the bars shall be 1 bar diameter over a length of 12 bar diameters.
5.20 Bundled bars shall be tied together at 30 bar diameter centers with 3 wraps of tie wire.
5.21 Mesh shall be lapped 2 transverse wires plus 25 mm.

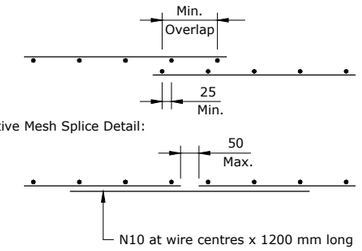

6.0 FORMWORK

6.1 All workmanship and materials shall be in accordance with AS 3610 & AS3600, except where varied by the project documentation.
6.2 The design certification & the performance of the formwork shall be the responsibility of the contractor.
6.3 During construction support propping shall be required where there are loads from stacked materials, formwork & other supported slabs. Once the concrete has achieved its nominated 28 day strength, the imposed loads shall not exceed those given in the loading table.
6.4 With multistory construction, it is expected that support propping will extend a minimum of 3 levels below the slab being poured. Prop removal is to be programmed so as not to overstress previously cast floors and shall be submitted to the engineer for approval.
6.5 The suspended slabs shall be propped until 28 day strength has been achieved for slabs. The formwork may be removed once 20 MPa strength has been achieved, however the slab will need to be back propped until 28 day strength has been achieved. No masonry or partition walls are to be constructed on suspended levels until all propping is removed.
6.6 All exposed corners shall have a 20 mm chamfer, UNO.
6.7 All finishes shall be in accordance with the architectural specification.

7.0 PERMANENT METAL FORMWORK

7.1 The permanent metal formwork shall be installed in accordance with the manufacturers recommendations and shall NOT be substituted from the product specified without written approval from the engineer.
7.2 The permanent metal formwork shall be suitably propped.
7.3 The permanent metal formwork shall not be spliced or joined midspan.
7.4 The permanent metal formwork shall have a minimum end bearing of 50 mm.
7.5 The permanent metal formwork shall be fixed to the supporting structure with spot welds or fasteners, there shall be a minimum of 1 fixing per sheet to the support each end adjacent to the side lap.
7.6 The permanent metal formwork may need to have the side lap fastened together midspan, this shall be carried out in accordance with the manufacturers recommendations.

8.0 HOLLOWCORE FLOOR PLANKS & WALL PANELS

8.1 All workmanship & materials shall be in accordance with AS3600.
8.2 The 28 day concrete strength shall be a minimum of 40 MPa.
8.3 The prestressing steel shall be stress relieved low relaxation strand in accordance with AS1311.
8.4 The floor plank topping shall be with 32 MPa concrete or as shown on the drawings. If the topping concrete is used to grout the keyways then the concrete shall have a maximum aggregate size of 10 mm.
8.5 The concrete topping thickness and reinforcement shall be as noted on the plans & sections.
8.6 The hollowcore planks & panels shall be lifted & supported only at the nominated lifting points.
8.7 The hollowcore floor planks shall be installed in accordance with the manufacturers specifications & workshop drawings.
8.8 The structure shall be maintained in a stable condition during the erection of the floor planks or wall panels with temporary bracing provided as required.
8.9 All keyways shall be aligned & grouted with a 3:1 sand : cement mix or approved concrete topping mix. Ensure that all keyways are properly filled.
8.10 Any proposed penetrations &/or chases will require the manufacturers and engineers approval prior to work being carried out.
8.11 A minimum of two (2) copies of all workshop drawings shall be supplied to the engineer for approval.

9.0 MASONRY

9.1 All workmanship and materials shall be in accordance with AS 3700.
9.2 The design strength of masonry shall be:

Exposure Classification to AS 3600	Brick Compressive Strength (MPa)	Brick Salt Resistance Grade	Durability Classification Of Built In Components	Mortar Mix	
				GP Portland e Cement:Lime: Sand	f'c (MPa)
A1 / A2	20	General	R3	1.0 : 1.0 : 6.0	2.8
B1	20	Purpose	(Galvanised)	1.0 : 1.0 : 6.0	2.8
B2	20	Exposure	R4 (Stainless)	1.0 : 0.5 : 4.5	2.8

9.3 All masonry walls supporting concrete slabs and beams shall have a slip joint comprising of two layers of galvanized steel in between the concrete and masonry.
9.4 All masonry walls supporting or supported by concrete floors shall be have vertical joints located to match any control / construction joints in the concrete.
9.5 Do not construct any masonry walls on suspended slabs until the slab formwork has been stripped and de-propped.
9.6 Non load bearing masonry walls shall be separated from concrete slab or beam above by 20 mm thick compressible filler.
9.7 Provide vertical control joints at 8 meters maximum centers, and 4 meters maximum from corners in masonry walls, and between new & existing brickwork. The joint shall have expansion joint ties and suitably sealed with a mastic sealant.
9.8 Masonry retaining walls are to be back filled with either of the following material:
- Coarse grained soil with low silt content
- Residual soil containing stones
- Fine silty sand
- Granular materials with low clay content

10.0 BLOCKWORK

10.1 All workmanship and materials shall be in accordance with AS 3700.
10.2 Reinforced concrete blockwork shall comply with the following, UNO:
- Blocks: Minimum 10 MPa unconfined compressive strength conforming to AS4455.
- Mortar: 1.0 : 1.0 : 6.0 ratio of cement : lime : sand UNO.
- Blocks shall be either 'H' or 'Double-U' configuration.
- Provide cleanout holes at the base of the wall & rod core holes to remove excess mortar.
- Core filling shall be 20 MPa concrete with maximum 10 mm aggregate size with a maximum slump of 120 ±20 mm.
- Minimum cover of 55 mm from the outside of the blockwork.

10.3 Blockwork retaining walls are to be back filled with either of the following material:
- Coarse grained soil with low silt content
- Residual soil containing stones
- Fine silty sand
- Granular materials with low clay content

10.4 Vertical control joints shall be provided at maximum 8000 mm centers. They shall be reinforced with N20-400 dowels 600 mm long. One end shall be greased & capped.
10.5 No admixtures shall be used to the mortar mix or the core fill mix without prior written consent from the engineer.

11.0 STRUCTURAL STEELWORK

11.1 All workmanship and materials shall be in accordance with AS 4100 and AS/NZS 4600.
11.2 The structural design has been based on the following steel grades, UNO:
Hot rolled universal beams, columns, channels & angles:300PLUS
Circular, square & rectangular hollow sections: C350/C450LO
Cold formed open DuraGal profiles: C350/C450LO
Cold formed lipped Cee & Zed purlins: G550/G500/G450
11.3 The structural design has been based on MBPMA nominal size Cee & Zed lipped purlins.
11.4 Qualifications of welding procedures and personnel shall conform to Section 4 of AS 1554.1. Non destructive testing of welds shall include 100% visual inspection and additional testing as shown on the drawings.
11.5 All welds shall be 6 mm continuous fillet type SP, UNO. All butt welds shall be complete penetration in accordance with AS 1554.1, UNO.
11.6 Bolt designation:
4.6/S Commercial bolts to AS 1111, snug tightened.
8.8/S High strength structural bolts to AS 1562, snug tightened.
8.8/TB High strength structural bolts to AS 1562, fully tensioned bearing joint.
8.8/TF High strength structural bolts to AS 1562, fully tensioned friction joint.
11.7 All bolts shall be M20 8.8/S, with a minimum of 2 bolts per connection, UNO.
11.8 Fin plates shall be a minimum of 10 mm thick, grade 300PLUS steel, UNO.
11.9 Concrete encased steelwork shall be wrapped with SL62 mesh and shall have a minimum of 50 mm cover, UNO.
11.10 Steelwork not encased in concrete shall have the following surface treatment :

Exposure Classification to AS 3600	Steelwork Protection Required
A1 / A2	Power tool clean to AS1627 Class 1 1 Coat Alkyd Primer (Zinc Phosphate)
B1	Abrasive blast to AS1627 Class 2.5 1 Coat Inorganic Zinc Silicate
B2	Hot Dipped Galvanised to AS1650

11.11 Where sealed tube members are hot dip galvanized, the fabricator shall provide drill holes as necessary to allow gases to escape.
11.12 All transport and erection damage, site welds etc., shall be reinstated to an equivalent finish to adjacent steelwork.
11.13 A minimum of two (2) copies of all workshop drawings shall be supplied to the engineer for approval.

12.0 PRECAST PANELS

12.1 All workmanship and materials shall be in accordance with AS 3600.
12.2 The precast panel concrete strength at 28 days shall be a minimum of 40 MPa. The concrete shall be a minimum of 20 MPa before removal from molds.
12.3 Dimensions shown are final concrete sizes and additional concrete must be provided to allow for loss of structural thickness due to surface treatment, etc.
12.4 Panel structural thickness shall be as noted.
12.5 Refer to the architectural drawings for dimensions. rebates, etc.
12.6 All metal work and cast-in ferrules shall be hot dipped galvanized which are exposed to the external enviroment.
12.7 All cast-in ferrules shown on the drawings are to remain sealed until the erection of the panel and shall not be used for lifting.
12.8 Lifting ferrules are the contractors responsibility & extra reinforcement needs to provided in accordance with manufacturers recommendations.
12.9 Concrete cover shall be in accordance with structural drawings.
12.10 Fabric in the panels shall be one sheet, no lapping is permitted unless shown on the structural drawings.
12.11 Penetrations for services shall be neat formed holes, hole boring is not permitted.
12.12 Temporary steel packers may be used under the panels provided they have a minimum of 50 mm cover from the concrete slab or grout.
12.13 A minimum of two (2) copies of all workshop drawings shall be supplied to the engineer for approval. The shop drawings shall show all cast-in inserts.

13.0 TIMBER

13.1 All workmanship and materials shall be in accordance with AS 1684 and AS1720.
13.2 AS1684 shall be applied to domestic construction in sheltered locations.
13.3 Softwood to be a minimum of F7 and hardwood to be a minimum of F17 UNO.
13.4 External timber shall be either hardwood durability class I or II as per AS1720 or impregnated pine grade F7, pressure treated to As1604 and re-dried prior to use. Supplementary treatment shall be applied to all cut surfaces.
13.5 Two (2) copies of timber truss shop drawings shall be submitted to the engineer for approval, clearly indicating design loads and point loads applied to the structure.
13.6 All bolts in timber construction shall be M16 4.6/s UNO. Washers under heads and nuts shall be at least 2.5 times the bolt diameter.
13.7 All timber joints and notches shall be a minimum of 100 mm away from loose
13.8 knots, severe sloping grain, gum veins or other minor defects.

14.0 FOUNDATION MAINTENANCE

14.1 All soils are affected by water. Silts are weakened by water and some sands can settle if heavily watered, but most problems arise on clay foundations. Clays swell and shrink due to changes in moisture content and the potential amount of the movement is implied in the site classification in Australian Standard AS2870, which is specified as follows:
A Stable (Non-reactive). S Slightly Reactive.
M Moderately Reactive. H Highly Reactive.
E Extremely Reactive.
14.2 All sites shall be maintained at essentially stable moisture conditions and extremes of wetting and drying prevented. This will require attention to the following.
14.3 Site drainage: The site shall be graded or drained so that water cannot pond against or near the house. The ground immediately adjacent to the house shall be graded to a uniform fall of 50 mm minimum away from the house over the first meter. The sub floor space for houses with suspended floors shall be graded or drained to prevent ponding. The site drainage requirements shall be maintained.
14.4 Gardens: The gardens shall not interfere with the drainage requirements or the sub floor ventilation and weep hole drainage systems. Garden beds adjacent to the house should be avoided. Over watering of gardens close to the house shall be avoided.
14.5 Restrictions on trees / shrubs: Planting of trees shall be avoided near the footings of a house or neighboring house on reactive sites as they can cause damage due to drying of the clay. To minimize the possibility of damage, tree planting should be restricted to a distance from the house of :
1.50 x mature height for Class E sites
1.00 x mature height for Class H sites
0.75 x mature height for Class M sites
14.6 Where rows or groups of trees are involved, the distance from the building should be increased. Removal of trees from the site can also cause similar problems.
14.7 Repair of leaks : Leaks in plumbing, including storm water and sewerage drainage should be repaired promptly.

A3 ORIGINAL SIZE

COPYRIGHT:
E2 Civil And Structural Design Pty Ltd is the owner of the copyright subsisting in these drawings, plans, designs and specifications. They must not be used, reproduced or copied in whole or in part without prior written consent of E2 Civil And Structural Design Pty Ltd. Design is not certified unless signed.

REV.	APP.	AMENDMENT DESCRIPTION	DATE
A		RELEASED FOR CONSTRUCTION	16.06.20

P.O. Box 608
WAVERLEY NSW 2024
p 02 8594 6111
f 02 8089 1051
info@E2design.com.au
www.E2design.com.au
ACN 145 358 265
E2 CIVIL AND STRUCTURAL DESIGN PTY LTD

CLIENT: HUTCHINSON

PROJECT NAME: PROPOSED ALTERATIONS 18 YACHTSMANS PARADISE NEWPORT NSW 2106

DRAWING TITLE: General Notes

SCALE:	DATE: 30 Apr 2020	DESIGN/APPROVED: CB	REV: A
PROJECT: 19.592	DRAWING: S1	SIGNED:	

DO NOT SCALE FROM DRAWINGS - USE ONLY FIGURED DIMENSIONS

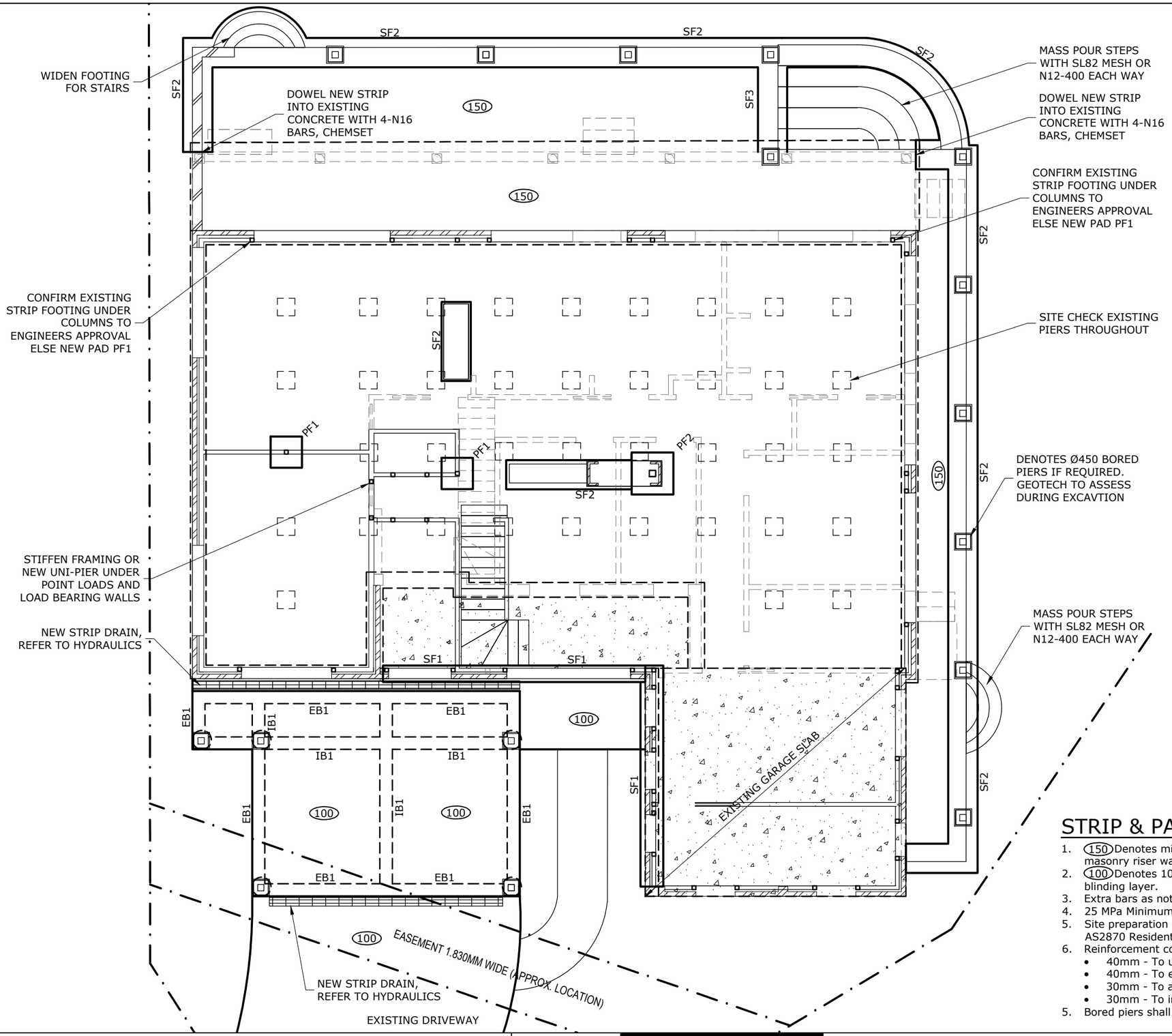

A3 ORIGINAL SIZE

DESIGN CRITERIA:

Site Soil Classification = P
Wind Classification = W33 (N2)
Construction Type = Mixed Construction
Roof Cladding Type = Metal Sheeting
(Note: Masonry shall be articulated in accordance with technical note 61 from the Cement & Concrete Association of Australia)

EXPOSURE CLASSIFICATION:

Interior Surfaces = A1
Exterior Surfaces = B2

BORED PIER NOTE:

Bored piers shall be installed if the slab or footings are founded on fill or non-uniform material or the existing residence has been piered.
Design engineer shall be contacted once excavation is complete to assess the need for piering.
The bored piers shall be installed to engineers approval.

NEW COLUMN NOTE:

All new columns shall be founded off existing footings to engineer's approval, else new pad footing (450mm SQ x 500mm deep) shall be installed.

FLOOR TILING NOTE:

SL92 mesh shall be installed in place of the SL82 mesh for tiles areas.

EXISTING FOOTING NOTE:

Existing footing depth shall be confirmed on-site to assess the need for underpinning. No existing footing shall be undermined during excavation.

GEOTECHNICAL NOTE:

The foundation requirements are in accordance with the Geotechnical report completed by Crozier Project 2020-075 dated April 2020.
The foundation and bearing material along with the chosen piering method shall be approved by the geotechnical engineer during excavation.
All footings have been designed to be supported on a bearing material of 100KPa or greater. Foundation material shall be certified by the Geotechnical engineer during excavation.

STRIP & PAD FOOTING PLAN 1:100

1. (150) Denotes min 150 thick slab with SL82 mesh top and bottom supported over masonry riser walls. Slip joint over masonry. 32MPa min
2. (100) Denotes 100 thick pavement slab with SL82 mesh over firm ground and blinding layer.
3. Extra bars as noted on plan & sections.
4. 25 MPa Minimum concrete strength, typical unless noted otherwise.
5. Site preparation shall be carried out in accordance with the current edition of AS2870 Residential slabs & footings construction code & with the general notes.
6. Reinforcement cover to the ground floor slab shall be as follows:
   - 40mm - To unprotected ground
   - 40mm - To external exposure
   - 30mm - To a vapor barrier in contact with the ground
   - 30mm - To internal exposure
5. Bored piers shall be in accordance with the bored pier note and as shown on plan.

COPYRIGHT:
E2 Civil And Structural Design Pty Ltd is the owner of the copyright subsisting in these drawings, plans, designs and specifications. They must not be used, reproduced or copied in whole or in part without prior written consent of E2 Civil And Structural Design Pty Ltd. Design is not certified unless signed.

REV.	APP.	AMENDMENT DESCRIPTION	DATE
C		GENERAL REVISIONS	02.10.20

P.O. Box 608
WAVERLEY NSW 2024
p 02 8594 6111
f 02 8089 1051
info@E2design.com.au
www.E2design.com.au
ACN 145 358 265
E2 CIVIL AND STRUCTURAL DESIGN PTY LTD

CLIENT: HUTCHINSON

PROJECT NAME: PROPOSED ALTERATIONS 18 YACHTSMANS PARADISE NEWPORT NSW 2106

DRAWING TITLE: Strip & Pad Footing Plan

SCALE:	DATE:	DESIGN/APPROVED:	REV:
1:100	30 Apr 2020	CB	C

PROJECT:	DRAWING:	SIGNED:
19.592	S2	

DO NOT SCALE FROM DRAWINGS - USE ONLY FIGURED DIMENSIONS

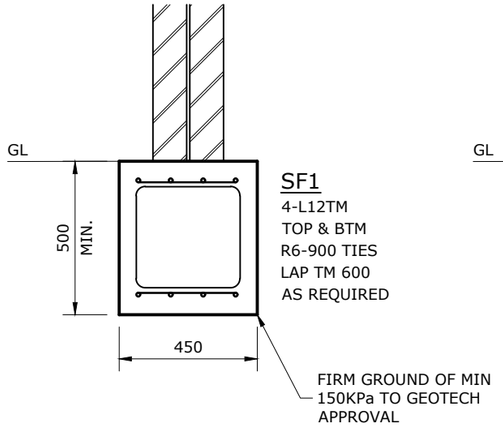

STRIP FOOTING 'SF1' DETAIL 1:20

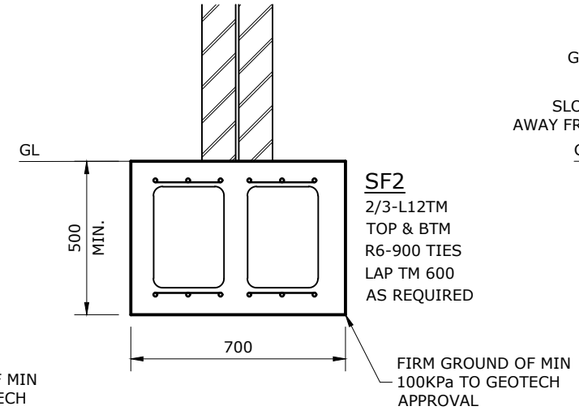

STRIP FOOTING 'SF2' DETAIL 1:20

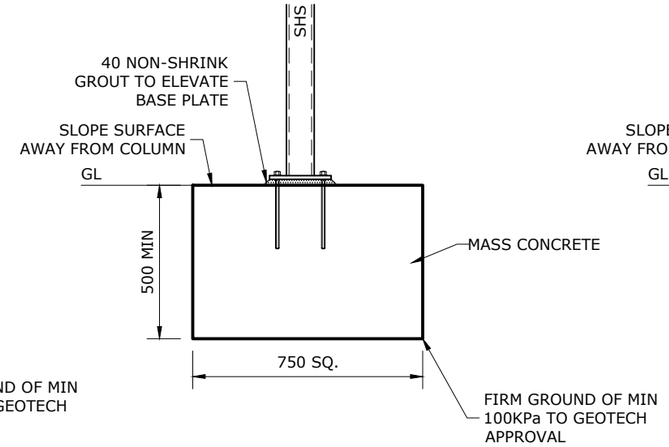

PAD FOOTING 'PF1' DETAIL 1:20

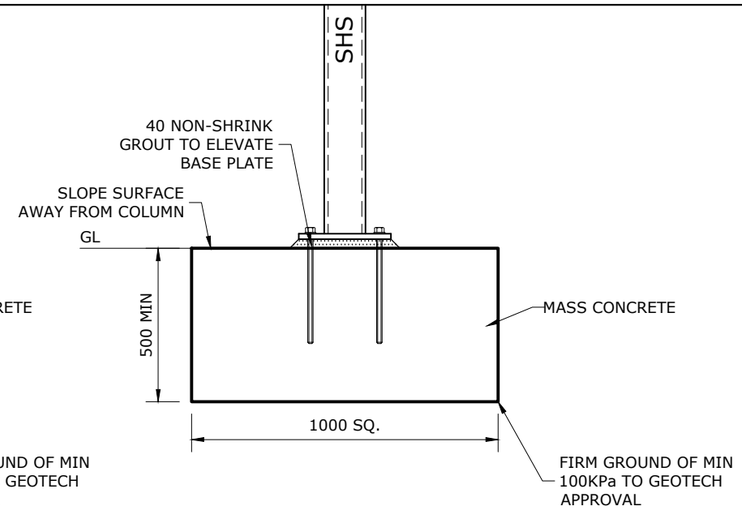

PAD FOOTING 'PF2' DETAIL 1:20

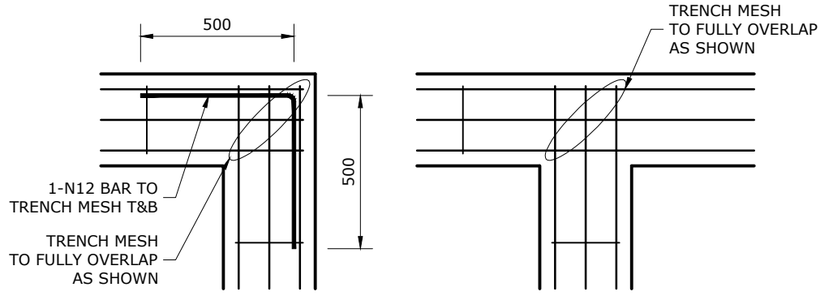

FOOTING CORNER DETAIL 1:20

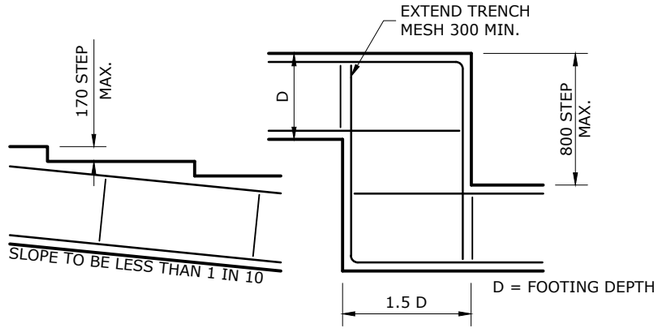

FOOTING STEP DETAIL 1:20

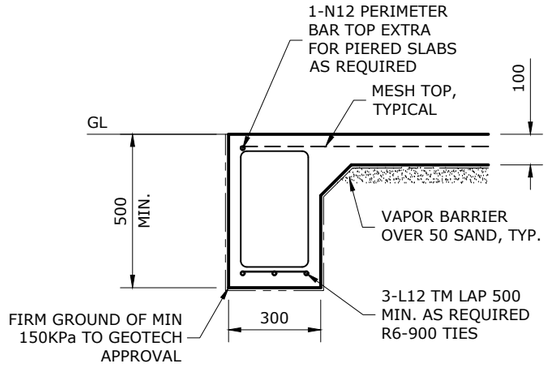

EDGE BEAM DETAIL 'EB1' 1:20

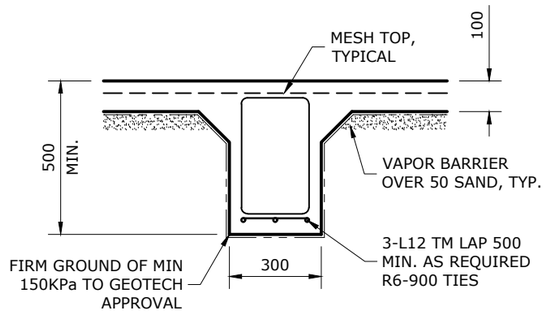

INTERNAL BEAM DETAIL 'IB1' 1:20

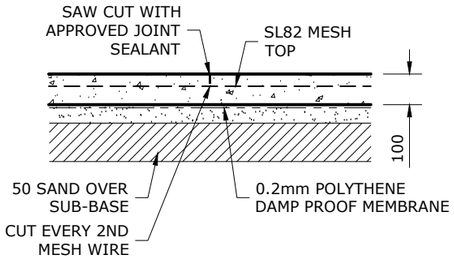

SAWN JOINT 'SJ' DETAIL 1:20

MAXIMUM 3600mm c/c SPACING
FOR PAVING SLABS ONLY

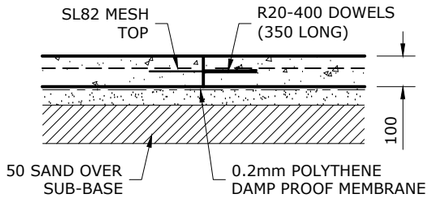

CONSTRUCTION JOINT 'CJ' DETAIL 1:20

MAXIMUM 10800mm c/c SPACING
FOR PAVING SLABS ONLY

A3 ORIGINAL SIZE

COPYRIGHT:
E2 Civil And Structural Design Pty Ltd is the owner of the copyright subsisting in these drawings, plans, designs and specifications. They must not be used, reproduced or copied in whole or in part without prior written consent of E2 Civil And Structural Design Pty Ltd. Design is not certified unless signed.

REV.	APP.	AMENDMENT DESCRIPTION	DATE
C		GENERAL REVISIONS	02.10.20

P.O. Box 608
WAVERLEY NSW 2024
p 02 8594 6111
f 02 8089 1051
info@E2design.com.au
www.E2design.com.au
ACN 145 358 265
E2 CIVIL AND STRUCTURAL DESIGN PTY LTD

CLIENT: HUTCHINSON

PROJECT NAME: PROPOSED ALTERATIONS
18 YACHTSMANS PARADISE
NEWPORT NSW 2106

DRAWING TITLE: Strip & Pad Footing Details

SCALE:	DATE:	DESIGN/APPROVED:	REV:
1:20	30 Apr 2020	CB	C

PROJECT:	DRAWING:	SIGNED:
19.592	S3	

DO NOT SCALE FROM DRAWINGS - USE ONLY FIGURED DIMENSIONS

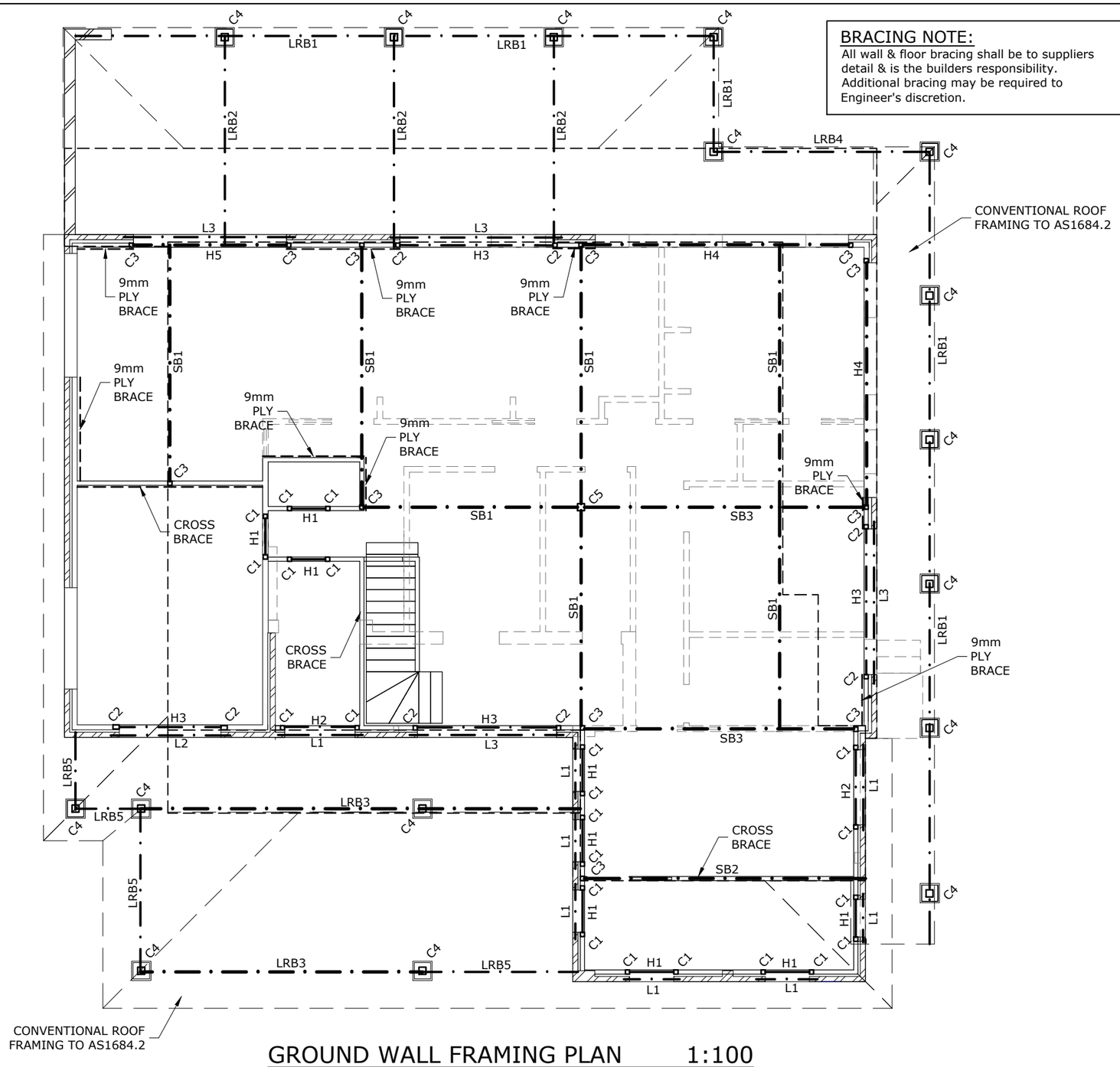

GROUND WALL FRAMING PLAN 1:100

1. Minimum 150mm end bearing for all lintels supporting masonry unless noted otherwise.
2. Block beams down to brickwork walls under at supports unless noted otherwise.
3. Packing to be provided over all existing and new ground floor walls.
4. Wall supporting first floor shall have a double top plate.
5. Balustrades, stairs, awnings, barriers and handrails to be by others to Australian Standards.

BRACING NOTE:

All wall & floor bracing shall be to suppliers detail & is the builders responsibility. Additional bracing may be required to Engineer's discretion.

DURABILITY NOTE:

All LVL timbers shall be protected from the environment.
Steel beams and columns shall be protected from corrosion using paint protection or galvanising in accordance with Australian Standards AS 2312 to meet a minimum design life of 50 years. If maintenance of this system is required this must be carried out by the owner. Corrosion protection systems shall be maintained by others for the design life of 50 years. The occupant should be made aware of the corrosion protection life and maintain accordingly. For example most paint protection systems can be made to last 15 years without maintenance. They will require maintenance to meet the 50 year design life that is not the responsibility of the engineer.
If steel beams and posts are designated to be galvanised end plates, cap plates and base plates shall also be galvanised.
All nuts and bolts shall be galvanised or marine grade stainless steel.

TIMBER FRAMING NOTE:

All timber framing, connections, fixings, notches, etc shall be in installed in accordance with AS1684-2010: Residential Timber Framed Construction (non-cyclonic areas) and the current edition of the Building Code of Australia.
Double LVL (of same depth and width as floor joists) shall be installed under all load bearing walls & columns over, UNO. Floor joist centers shall be closed up to 300mm max. in tiled floor areas.

STEEL CONNECTION NOTE:

All structural steel bolt holes shall not exceed a diameter 2mm greater than that of the given bolt diameter. All column base plate bolt holes shall not exceed a diameter 6mm greater than that of the given bolt diameter. All base plate bolt holes exceeding 3mm but not more than 6mm greater in diameter than the given bolt will require a 4mm thick base plate washer to be installed. Elongated or protruded bolt holes are not approved.
The minimum pitch, or the distance between the centres of the bolt holes, in any given plate or cleat shall not be less than 2.5 times the diameter of the given bolt. The minimum edge distance from the centre of the bolt hole to the edge of the given plate or cleat for all standard bolt holes shall not be less than 1.5 times the diameter of the given bolt or 30mm, whichever is greater.

PROPPING NOTE:

Propping and stability of the existing structure during demolition & construction is the responsibility of the builder. Care shall be taken to ensure the existing structure is stable prior to & during demolition.

EXISTING FRAMING:

All proposed framing members are based on assumptions and should be confirmed during demolition once structure is exposed for visible inspection.

STRUCTURAL STEEL & TIMBER FRAMING SCHEDULE

MARK	TYPE	SECTION SIZE	COMMENT
SB1	Beam	310 UB 32.0	300 Plus
SB2	Beam	250 PFC 35.5 (Over Stud Wall)	300 Plus
SB3	Beam	310 UB 46.2	300 Plus
H1	Header	2 / 90 x 45 MGP10	Seasoned
H2	Header	2 / 140 x 45 MGP10	Seasoned
H3	Header	2 / 240 x 45 LVL	Hyspan
H4	Header	300 PFC 40.1 + 200 x 10 Plate Galvanised	Hyspan
H5	Header	300 PFC 40.1	Hyspan
LRB1	Roof Beam	195 x 65 GL10	Glulam
LRB2	Roof Beam	295 x 85 GL13	Glulam
LRB3	Roof Beam	250 PFC 35.5 Galvanised	300 Plus
LRB4	Roof Beam	180 PFC 20.9 Galvanised	300 Plus
LRB5	Roof Beam	230 x 65 GL13	300 Plus
L1	Lintel	100 x 100 x 6 Galintel	Galintel
L2	Lintel	100 x 100 x 10 EA Gal	300 Plus
L3	Lintel	150 x 100 x 10 UA Gal	300 Plus
C1	Column	Double Stud	Seasoned
C2	Column	Triple Stud	Seasoned
C3	Column	100 x 100 x 6.0 SHS	C350L0
C4	Column	200 x 200 F27	Hardwood
C5	Column	150 x 150 x 6.0 SHS	C350L0

A3 ORIGINAL SIZE

COPYRIGHT:
E2 Civil And Structural Design Pty Ltd is the owner of the copyright subsisting in these drawings, plans, designs and specifications. They must not be used, reproduced or copied in whole or in part without prior written consent of E2 Civil And Structural Design Pty Ltd. Design is not certified unless signed.

REV.	APP.	AMENDMENT DESCRIPTION	DATE
B		GENERAL REVISIONS	02.10.20
A		RELEASED FOR CONSTRUCTION	16.06.20

P.O. Box 608
WAVERLEY NSW 2024
p 02 8594 6111
f 02 8089 1051
info@E2design.com.au
www.E2design.com.au
ACN 145 358 265
E2 CIVIL AND STRUCTURAL DESIGN PTY LTD

CLIENT: HUTCHINSON

PROJECT NAME: PROPOSED ALTERATIONS 18 YACHTSMANS PARADISE NEWPORT NSW 2106

DRAWING TITLE: Ground Wall Framing Plan

SCALE:	DATE:	DESIGN/APPROVED:	REV:
1:100	30 Apr 2020	CB	B

PROJECT: 19.592 DRAWING: S4 SIGNED:

DO NOT SCALE FROM DRAWINGS - USE ONLY FIGURED DIMENSIONS

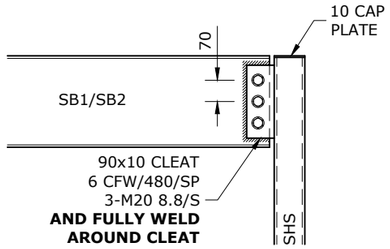

310UB TO SHS (PORTAL) CONNECTION 1:20

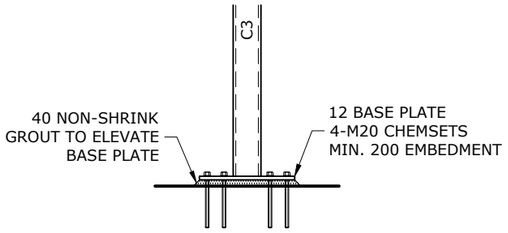

SHS C3 BASE DETAIL (EXTERNAL) 1:20

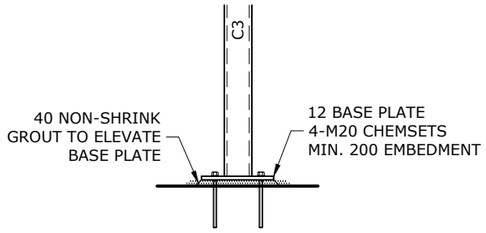

SHS C3 BASE DETAIL (INTERNAL) 1:20

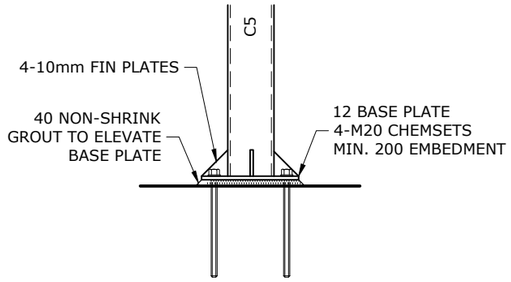

SHS C5 BASE DETAIL 1:20

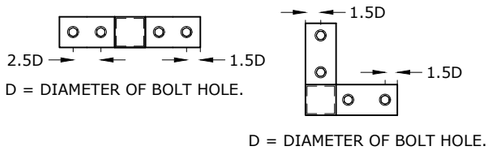

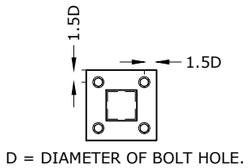

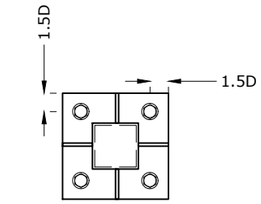

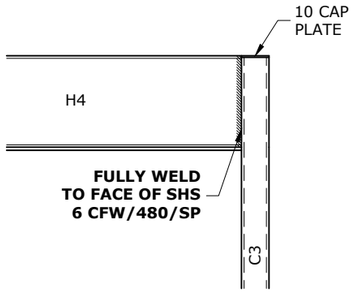

300PFC TO SHS (PORTAL) CONNECTION 1:20

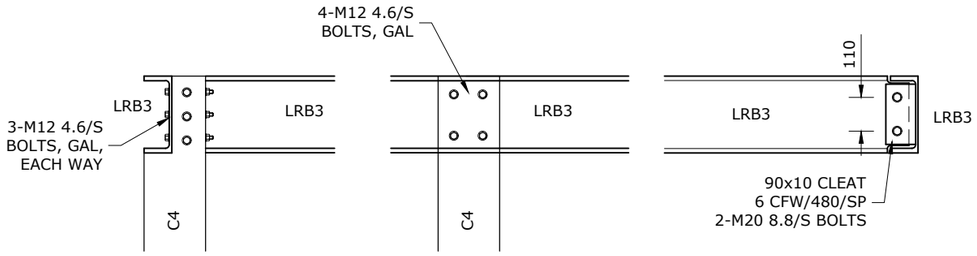

250PFC TO C4 CONNECTION 1:20

250PFC TO 250PFC CONNECTION 1:20

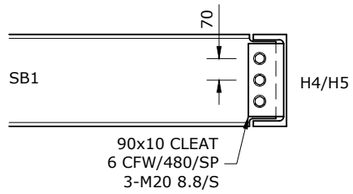

310UB TO 300PFC CONNECTION 1:20

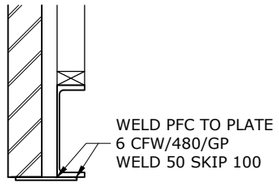

300 PFC + 200x10 PLATE DETAIL 1:20

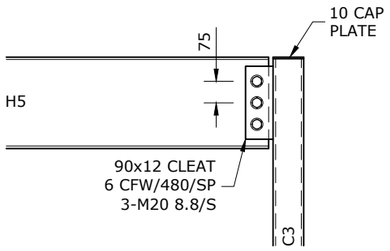

H5 TO SHS CONNECTION 1:20

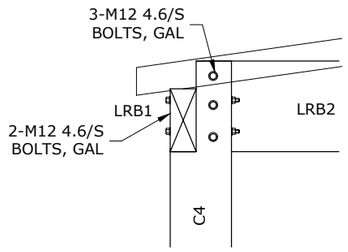

LRB1/2 TO C4 CONNECTION 1:20

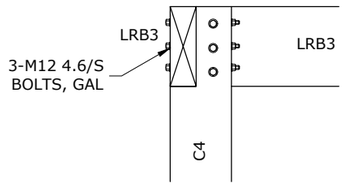

LRB3 TO C4 CONNECTION 1:20

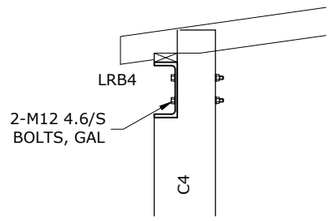

LRB4 TO C4 CONNECTION 1:20

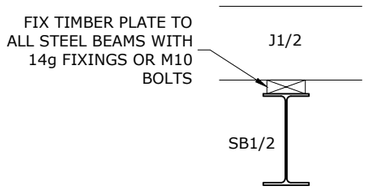

JOIST OVER STEEL BEARER 1:20

A3 ORIGINAL SIZE

COPYRIGHT:
E2 Civil And Structural Design Pty Ltd is the owner of the copyright subsisting in these drawings, plans, designs and specifications. They must not be used, reproduced or copied in whole or in part without prior written consent of E2 Civil And Structural Design Pty Ltd. Design is not certified unless signed.

REV.	APP.	AMENDMENT DESCRIPTION	DATE
B		GENERAL REVISIONS	02.10.20
A		RELEASED FOR CONSTRUCTION	16.06.20

P.O. Box 608
WAVERLEY NSW 2024
p 02 8594 6111
f 02 8089 1051
info@E2design.com.au
www.E2design.com.au
ACN 145 358 265
E2 CIVIL AND STRUCTURAL DESIGN PTY LTD

CLIENT: HUTCHINSON

PROJECT NAME: PROPOSED ALTERATIONS 18 YACHTSMANS PARADISE NEWPORT NSW 2106

DRAWING TITLE: Structural Framing Details

SCALE:	DATE:	DESIGN/APPROVED:	REV:
1:20	30 Apr 2020	CB	B

PROJECT:	DRAWING:	SIGNED:
19.592	S5	

DO NOT SCALE FROM DRAWINGS - USE ONLY FIGURED DIMENSIONS

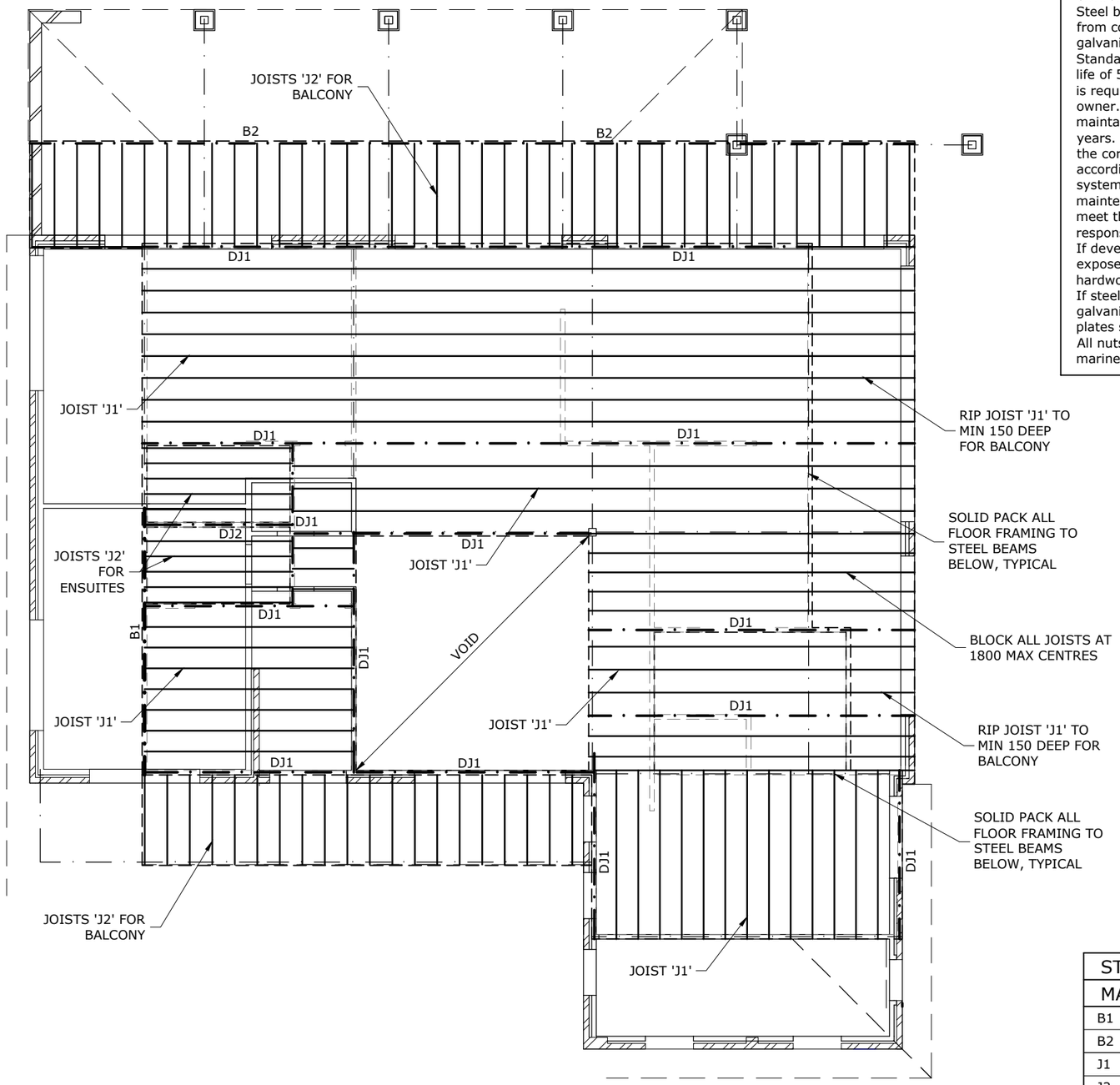

DURABILITY NOTE:

All LVL timbers shall be protected from the environment.
Steel beams and columns shall be protected from corrosion using paint protection or galvanising in accordance with Australian Standards AS 2312 to meet a minimum design life of 50 years. If maintenance of this system is required this must be carried out by the owner. Corrosion protection systems shall be maintained by others for the design life of 50 years. The occupant should be made aware of the corrosion protection life and maintain accordingly. For example most paint protection systems can be made to last 15 years without maintenance. They will require maintenance to meet the 50 year design life that is not the responsibility of the engineer.
If development is in a bushfire zone all exposed timber members shall be F17 grade hardwood.
If steel beams and posts are designated to be galvanised end plates, cap plates and base plates shall also be galvanised.
All nuts and bolts shall be galvanised or marine grade stainless steel.

TIMBER FRAMED BALCONIES:

Fibre Cement Sheeting shall be min. 15mm thick and screwed into floor joists. Water proof membrane shall be installed to all tiled areas by others. Flashing & set-downs to BCA requirements.

TIMBER FRAMING NOTE:

All timber framing, connections, fixings, notches, etc shall be in installed in accordance with AS1684-2010: Residential Timber Framed Construction (non-cyclonic areas) and the current edition of the Building Code of Australia.
Double LVL (of same depth and width as floor joists) shall be installed under all load bearing walls & columns over, UNO. Floor joist centers shall be closed up to 300mm max. in tiled floor areas.

BRACING NOTE:

All wall & floor bracing shall be to suppliers detail & is the builders responsibility.
Additional bracing may be required to Engineer's discretion.

FIRST FLOOR FRAMING PLAN 1:100

1. Minimum 150mm end bearing for all lintels supporting masonry unless noted otherwise.
2. Block beams down to brickwork walls under at supports unless noted otherwise.
3. Wet areas to have minimum 15mm CFC floor sheeting typical.
4. Packing to be provided over all existing ground floor walls.
5. Blocking shall be provided between joists at maximum 1.8m centres and at ends of any cantilevered joists.
6. Floor sheeting shall be fixed to joists at maximum 300 crs along each joists.
7. Step downs to BCA requirements.
8. Balustrades, stairs, awnings, barriers and handrails to be by others to Australian Standards.

STRUCTURAL STEEL & TIMBER FRAMING SCHEDULE

MARK	TYPE	SECTION SIZE	COMMENT
B1	Beam	250 PFC 35.5	300 Plus
B2	Beam	150 PFC 17.7	300 Plus
J1	Floor Joist	240 x 45 LVL @ 450 c/c	Hyspan
J2	Floor Joist	150 x 45 LVL @ 450 c/c	Hyspan
DJ1	Double J1	2 / 240 x 45 LVL	Hyspan
DJ2	Double J2	2 / 150 x 45 LVL	Hyspan

A3 ORIGINAL SIZE

COPYRIGHT:
E2 Civil And Structural Design Pty Ltd is the owner of the copyright subsisting in these drawings, plans, designs and specifications. They must not be used, reproduced or copied in whole or in part without prior written consent of E2 Civil And Structural Design Pty Ltd. Design is not certified unless signed.

REV.	APP.	AMENDMENT DESCRIPTION	DATE
B		GENERAL REVISIONS	02.10.20
A		RELEASED FOR CONSTRUCTION	16.06.20

P.O. Box 608
WAVERLEY NSW 2024
p 02 8594 6111
f 02 8089 1051
info@E2design.com.au
www.E2design.com.au
ACN 145 358 265
E2 CIVIL AND STRUCTURAL DESIGN PTY LTD

CLIENT: HUTCHINSON

PROJECT NAME: PROPOSED ALTERATIONS 18 YACHTSMANS PARADISE NEWPORT NSW 2106

DRAWING TITLE: First Floor Framing Plan

SCALE:	DATE:	DESIGN/APPROVED:	REV:
1:100	30 Apr 2020	CB	B

PROJECT:	DRAWING:	SIGNED:
19.592	S6	

DO NOT SCALE FROM DRAWINGS - USE ONLY FIGURED DIMENSIONS

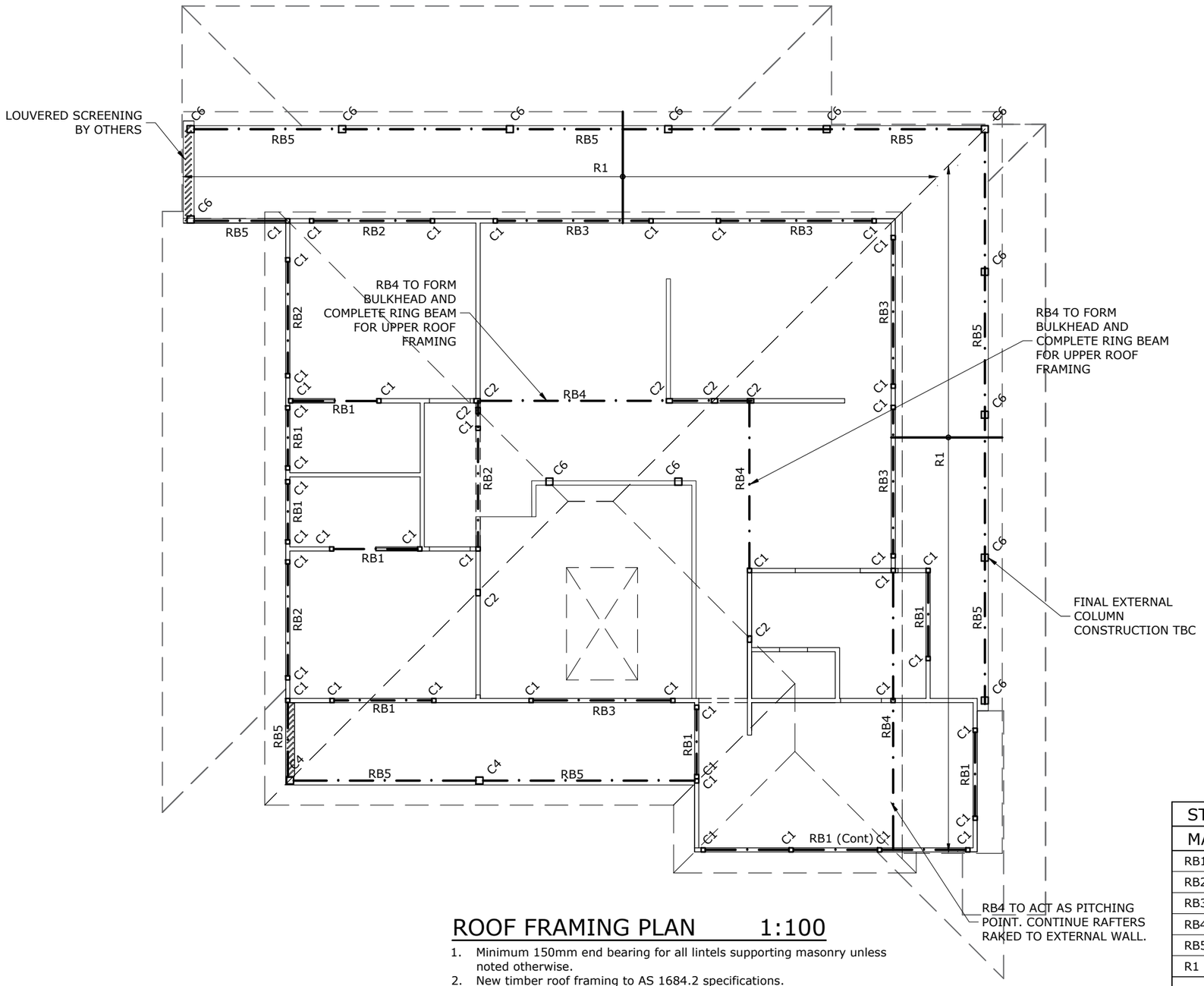

ROOF FRAMING PLAN 1:100

1. Minimum 150mm end bearing for all lintels supporting masonry unless noted otherwise.
2. New timber roof framing to AS 1684.2 specifications.
3. Fix rafters down to top plates and beams with triple grips.
4. Battens and roof sheeting by others.
5. Roof trusses shall be to manufacturer's specifications.
6. Balustrades, stairs, awnings, barriers and handrails to be by others to Australian Standards.

TIMBER FRAMING NOTE:

All timber framing, connections, fixings, notches, etc shall be in installed in accordance with AS1684-2010: Residential Timber Framed Construction (non-cyclonic areas) and the current edition of the Building Code of Australia.
Double LVL (of same depth and width as floor joists) shall be installed under all load bearing walls & columns over, UNO. Floor joist centers shall be closed up to 300mm max. in tiled floor areas.

BRACING NOTE:

All wall & floor bracing shall be to suppliers detail & is the builders responsibility. Additional bracing may be required to Engineer's discretion.

ROOF BRACING NOTE:

Roof shall be fully braced using Pryda Speed Brace fitted to manufacturers specifications. Additional bracing may be required to Engineer's discretion.

DURABILITY NOTE:

All LVL timbers shall be protected from the environment.
Steel beams and columns shall be protected from corrosion using paint protection or galvanising in accordance with Australian Standards AS 2312 to meet a minimum design life of 50 years. If maintenance of this system is required this must be carried out by the owner. Corrosion protection systems shall be maintained by others for the design life of 50 years. The occupant should be made aware of the corrosion protection life and maintain accordingly. For example most paint protection systems can be made to last 15 years without maintenance. They will require maintenance to meet the 50 year design life that is not the responsibility of the engineer.
If development is in a bushfire zone all exposed timber members shall be F17 grade hardwood.
If steel beams and posts are designated to be galvanised end plates, cap plates and base plates shall also be galvanised.
All nuts and bolts shall be galvanised or marine grade stainless steel.

STRUCTURAL STEEL & TIMBER FRAMING SCHEDULE

MARK	TYPE	SECTION SIZE	COMMENT
RB1	Roof Beam	2 / 140 x 45 MGP10	Seasoned
RB2	Roof Beam	2 / 190 x 45 MGP10	Seasoned
RB3	Roof Beam	2 / 240 x 45 MGP10	Seasoned
RB4	Roof Beam	2 / 200 x 45 LVL (Continuous)	Hyspan
RB5	Roof Beam	165 x 65 GL8	Glulam
R1	Rafter	90 x 45 MGP10 @ 600 c/c	Treated
C1	Column	Double Stud	Seasoned
C2	Column	Triple Stud	Seasoned
C6	Column	150 x 150 F27	Hardwood

A3 ORIGINAL SIZE

COPYRIGHT:
E2 Civil And Structural Design Pty Ltd is the owner of the copyright subsisting in these drawings, plans, designs and specifications. They must not be used, reproduced or copied in whole or in part without prior written consent of E2 Civil And Structural Design Pty Ltd. Design is not certified unless signed.

REV.	APP.	AMENDMENT DESCRIPTION	DATE
B		GENERAL REVISIONS	02.10.20
A		RELEASED FOR CONSTRUCTION	16.06.20

P.O. Box 608
WAVERLEY NSW 2024
p 02 8594 6111
f 02 8089 1051
info@E2design.com.au
www.E2design.com.au
ACN 145 358 265
E2 CIVIL AND STRUCTURAL DESIGN PTY LTD

CLIENT: HUTCHINSON

PROJECT NAME: PROPOSED ALTERATIONS 18 YACHTSMANS PARADISE NEWPORT NSW 2106

DRAWING TITLE: Roof Framing Plan

SCALE:	DATE:	DESIGN/APPROVED:	REV:
1:100	30 Apr 2020	CB	B

PROJECT:	DRAWING:	SIGNED:
19.592	S7	

DO NOT SCALE FROM DRAWINGS - USE ONLY FIGURED DIMENSIONS

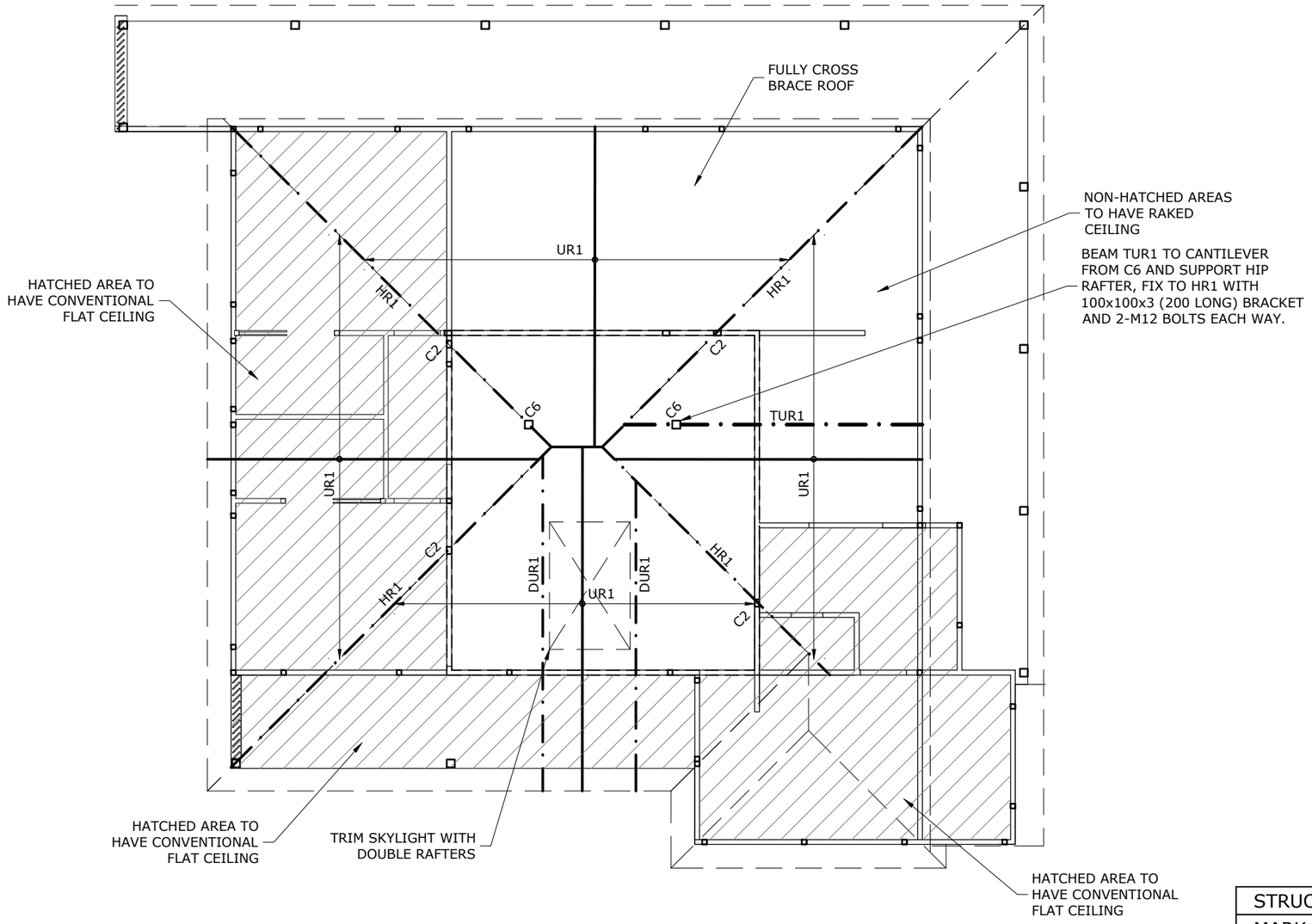

UPPER ROOF FRAMING PLAN 1:100

1. New timber roof framing to AS 1684.2 specifications.
2. Fix rafters down to top plates and beams with triple grips.
3. Battens and roof sheeting by others.
4. Balustrades, stairs, awnings, barriers and handrails to be by others to Australian Standards.

TIMBER FRAMING NOTE:

All timber framing, connections, fixings, notches, etc shall be in installed in accordance with AS1684-2010: Residential Timber Framed Construction (non-cyclonic areas) and the current edition of the Building Code of Australia.
Double LVL (of same depth and width as floor joists) shall be installed under all load bearing walls & columns over, UNO. Floor joist centers shall be closed up to 300mm max. in tiled floor areas.

BRACING NOTE:

All wall & floor bracing shall be to suppliers detail & is the builders responsibility. Additional bracing may be required to Engineer's discretion.

ROOF BRACING NOTE:

Roof shall be fully braced using Pryda Speed Brace fitted to manufacturers specifications. Additional bracing may be required to Engineer's discretion.

DURABILITY NOTE:

All LVL timbers shall be protected from the environment.
Steel beams and columns shall be protected from corrosion using paint protection or galvanising in accordance with Australian Standards AS 2312 to meet a minimum design life of 50 years. If maintenance of this system is required this must be carried out by the owner. Corrosion protection systems shall be maintained by others for the design life of 50 years. The occupant should be made aware of the corrosion protection life and maintain accordingly. For example most paint protection systems can be made to last 15 years without maintenance. They will require maintenance to meet the 50 year design life that is not the responsibility of the engineer.
If development is in a bushfire zone all exposed timber members shall be F17 grade hardwood.
If steel beams and posts are designated to be galvanised end plates, cap plates and base plates shall also be galvanised.
All nuts and bolts shall be galvanised or marine grade stainless steel.

STRUCTURAL STEEL & TIMBER FRAMING SCHEDULE

MARK	TYPE	SECTION SIZE	COMMENT
HR1	Hip Rafter	2 / 240 x 45 LVL	Hyspan
UR1	Rafter	200 x 45 LVL @ 600 c/c	Hyspan
DUR1	Double UR1	2 / 200 x 45 LVL	Hyspan
TUR1	Triple UR1	3 / 200 x 45 LVL	Hyspan
C1	Column	Double Stud	Seasoned
C2	Column	Triple Stud	Seasoned
C6	Column	150 x 150 F27	Hardwood

A3 ORIGINAL SIZE

COPYRIGHT:
E2 Civil And Structural Design Pty Ltd is the owner of the copyright subsisting in these drawings, plans, designs and specifications. They must not be used, reproduced or copied in whole or in part without prior written consent of E2 Civil And Structural Design Pty Ltd. Design is not certified unless signed.

REV.	APP.	AMENDMENT DESCRIPTION	DATE
A		RELEASED FOR CONSTRUCTION	16.06.20

P.O. Box 608
WAVERLEY NSW 2024
p 02 8594 6111
f 02 8089 1051
info@E2design.com.au
www.E2design.com.au
ACN 145 358 265
E2 CIVIL AND STRUCTURAL DESIGN PTY LTD

CLIENT: HUTCHINSON

PROJECT NAME: PROPOSED ALTERATIONS 18 YACHTSMANS PARADISE NEWPORT NSW 2106

DRAWING TITLE: Upper Roof Framing Plan

SCALE:	DATE:	DESIGN/APPROVED:	REV:
1:100	30 Apr 2020	CB	A

PROJECT:	DRAWING:	SIGNED:
19.592	S8	

DO NOT SCALE FROM DRAWINGS - USE ONLY FIGURED DIMENSIONS

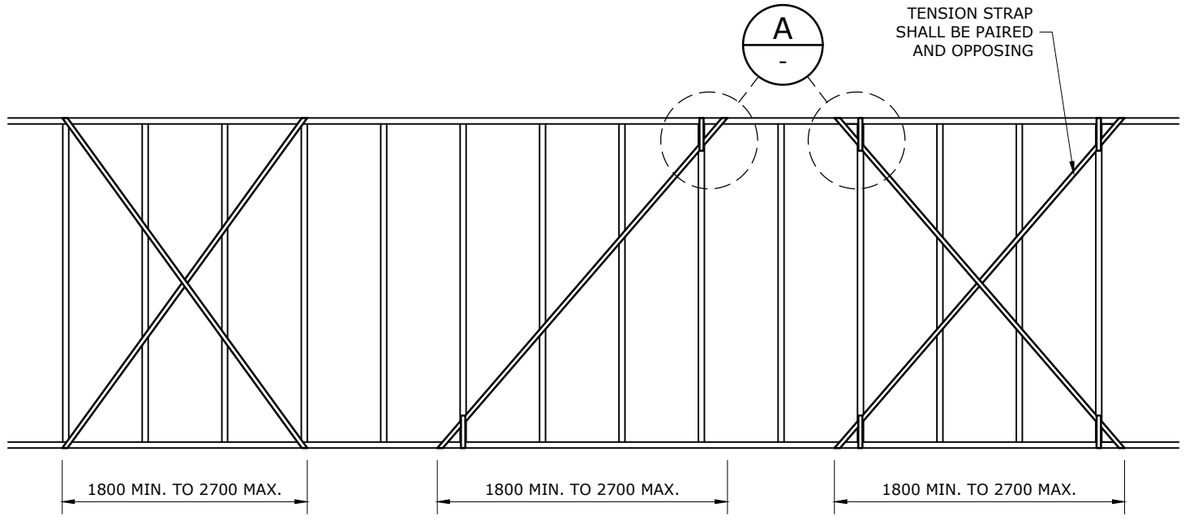

TYPE A TENSION STRAP TYPE A METAL ANGLE TYPE B TENSION STRAP

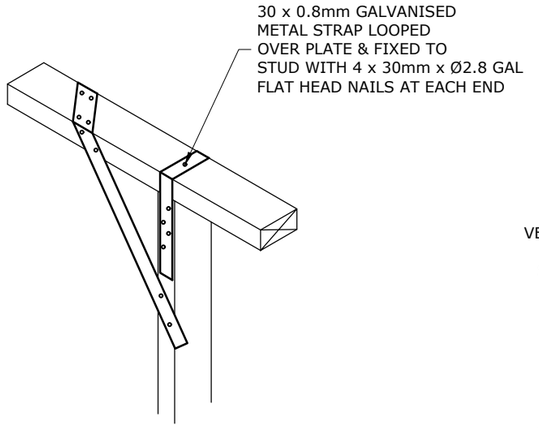

DETAIL A -

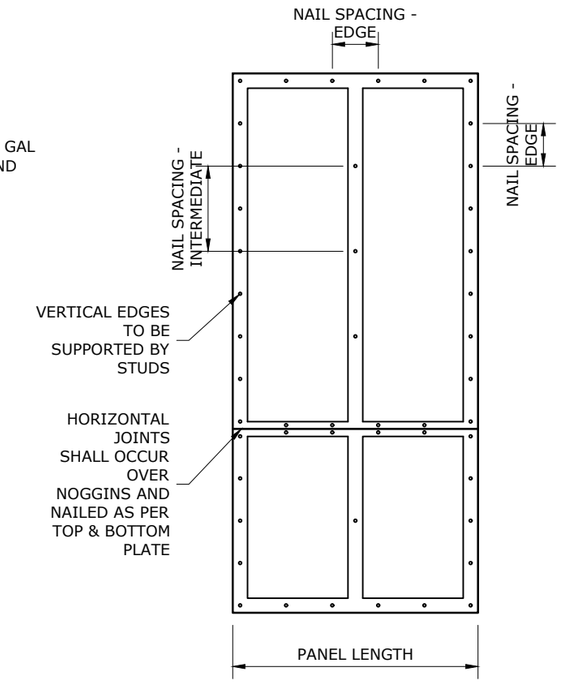

SHEET BRACING DETAILS TYPE C

TYPE C - SHEET BRACING (PB) SPECIFICS

PRODUCT	AUSTRALIAN STANDARD	TYPE / GRADE	MINIMUM THICKNESS (mm) FOR STUD SPACING (mm)		PANEL LENGTH (mm)	NAIL SIZE (mm)	NAIL SPACING (mm)		SPECIAL REQUIREMENTS
			450	600			EDGE	INTERMEDIATE	
PLYWOOD	AS2269	F8 F11 F14 F27	7 7 7 7	9 9 7 7	900 / 1200	30xØ2.8 GALV.	50 TO PLATES & 150 TO EDGE STUDS	300	NO NOGGING REQ'D EXCEPT AT SHEET ENDS. NAILS SHALL BE 7mm FROM ALL EDGES
HARDBOARD (MASONITE)	AS2458	G.P.	6.4	6.4	900 / 1200	30xØ2.8 GALV.	50 TO PLATES & 150 TO EDGE STUDS	300	NAILS TO BE 10mm FROM VERTICAL EDGES & 20mm FROM HORIZONTAL EDGES. NO NOGGING REQ'D EXCEPT AT SHEET ENDS.

TYPE B - SHEET BRACING NOTES

1. PANEL LENGTHS GREATER THAN THOSE LISTED ABOVE CAN BE CONSIDERED AS A NUMBER OF BRACING UNITS DIRECTLY PROPORTIONED TO THEIR INSTALLED LENGTH i.e. A 1200mm PANEL OF PLYWOOD EQUALS 1200 / 900 = 1.33 BRACING UNITS.
2. NAILS SHOULD BE DRIVEN JUST BELOW THE SURFACE OF THE SHEET USING THE HAMMER FACE ONLY. NAILS MUST NOT BE PUNCHED.
3. PB* INDICATES FULL LENGTH AVAILABLE.
4. REFER TO TABLE 1 ON THE FOLLOWING SHEET FOR TOP & BOTTOM PLATE FIXING DETAILS.

TYPE B - STRAP BRACING (SB) SPECIFICS

TYPE OF DIAGONAL BRACE	MATERIAL & SIZE	NAILING REQUIREMENTS		SPECIAL REQUIREMENTS
		TO EACH STUD	TO EACH PLATE	
TENSION STRAP	GALVANISED FLAT METAL TENSION STRAP NOM. SIZE 30x0.8mm & MIN. SECTION OF 24mm²	2x30xØ3.15 GALV. FLAT HEAD NAIL	4x30xØ2.8 GALV. FLAT HEAD NAIL	STRAPS MUST BE PROPERLY TENSIONED & STRAP MUST RETURN OVER TOP PLATE & UNDER THE BOTTOM PLATE. THE STUD NEAREST TO EACH END OF EACH DIAGONAL STRAP SHALL BE FIXED TO THE PLATES WITH STRAPS OR FRAMING ANCHORS 4x30xØ2.8 NAILS AT EACH END.

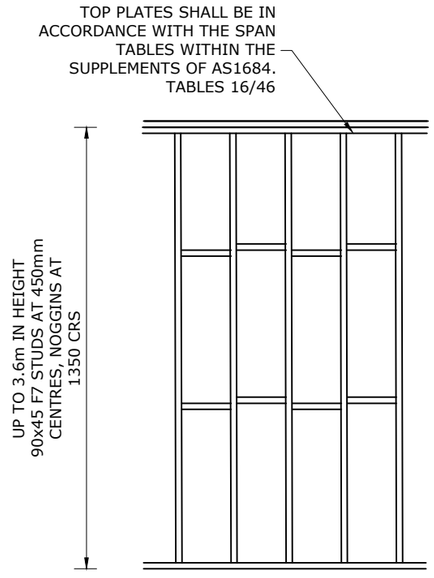

UP TO 3.6m HIGH WALL FRAMING DETAIL 1:50

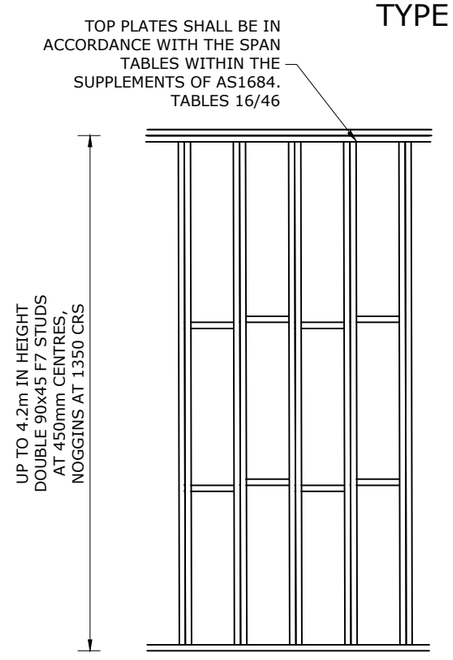

UP TO 4.2m HIGH WALL FRAMING DETAIL 1:50

A3 ORIGINAL SIZE

COPYRIGHT:
E2 Civil And Structural Design Pty Ltd is the owner of the copyright subsisting in these drawings, plans, designs and specifications. They must not be used, reproduced or copied in whole or in part without prior written consent of E2 Civil And Structural Design Pty Ltd. Design is not certified unless signed.

REV.	APP.	AMENDMENT DESCRIPTION	DATE
A		RELEASED FOR CONSTRUCTION	16.06.20

P.O. Box 608
WAVERLEY NSW 2024
p 02 8594 6111
f 02 8089 1051
info@E2design.com.au
www.E2design.com.au
ACN 145 358 265
E2 CIVIL AND STRUCTURAL DESIGN PTY LTD

CLIENT: HUTCHINSON

PROJECT NAME: PROPOSED ALTERATIONS 18 YACHTSMANS PARADISE NEWPORT NSW 2106

DRAWING TITLE: Bracing Notes & Details

SCALE:	DATE: 30 Apr 2020	DESIGN/APPROVED: CB	REV: A
PROJECT: 19.592	DRAWING: S9	SIGNED:	

DO NOT SCALE FROM DRAWINGS - USE ONLY FIGURED DIMENSIONS

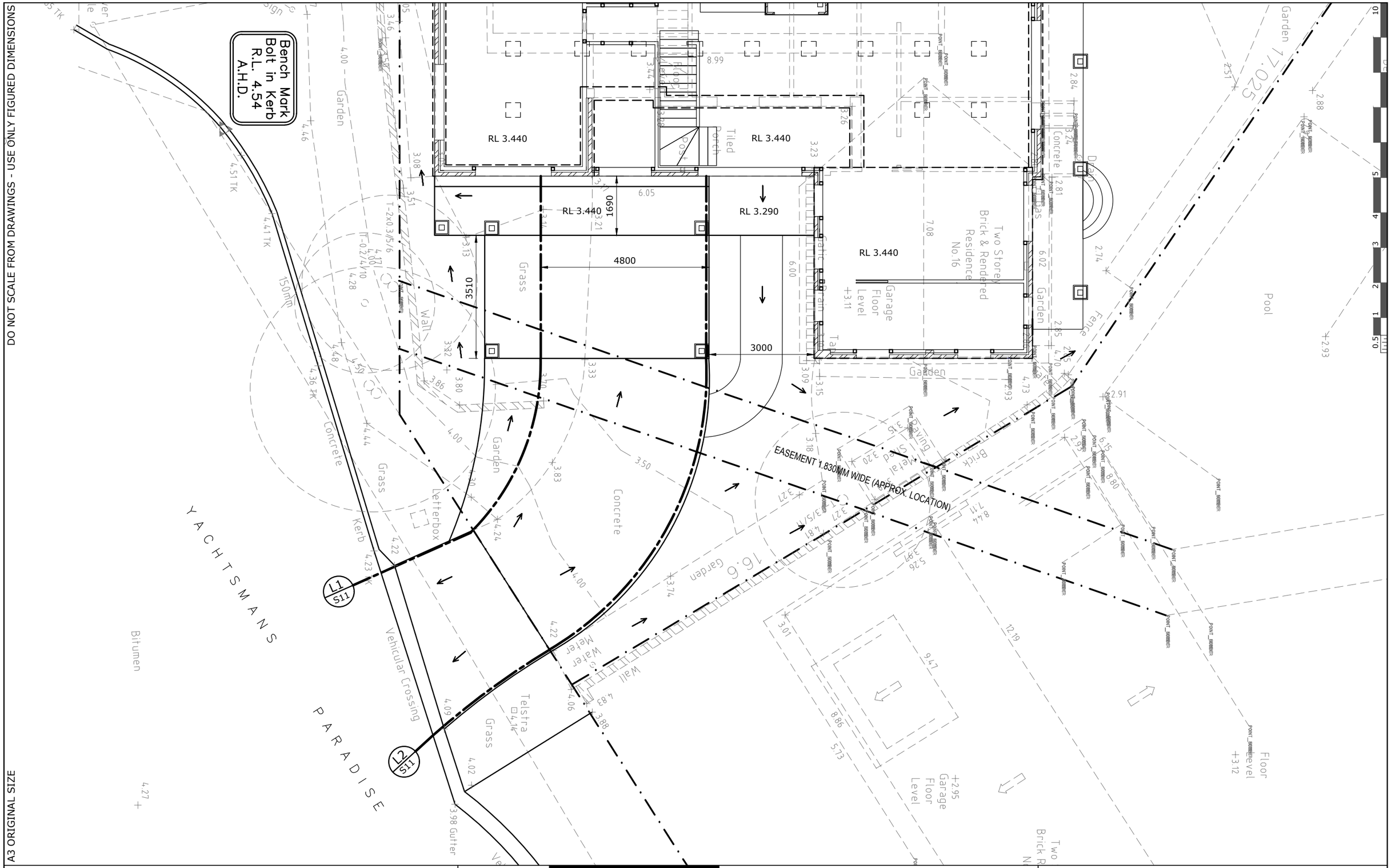

A3 ORIGINAL SIZE

COPYRIGHT:
E2 Civil And Structural Design Pty Ltd is the owner of the copyright subsisting in these drawings, plans, designs and specifications. They must not be used, reproduced or copied in whole or in part without prior written consent of E2 Civil And Structural Design Pty Ltd. Design is not certified unless signed.

REV.	APP.	AMENDMENT DESCRIPTION	DATE
B		GENERAL REVISIONS	02.10.20
A		FOR CONSTRUCTION	14.08.20

P.O. Box 608
WAVERLEY NSW 2024
p 02 8594 6111
f 02 8089 1051
info@E2design.com.au
www.E2design.com.au
ACN 145 358 265

E2 CIVIL AND STRUCTURAL DESIGN PTY LTD

CLIENT: HUTCHINSON

PROJECT NAME: PROPOSED ALTERATIONS
18 YACHTSMANS PARADISE
NEWPORT NSW 2106

DRAWING TITLE: DRIVEWAY PLAN

SCALE:	DATE:	DESIGN/APPROVED:	REV:
1:100	30 Apr 2020	CB	B

PROJECT:	DRAWING:	SIGNED:
19.592	S10	

DO NOT SCALE FROM DRAWINGS - USE ONLY FIGURED DIMENSIONS

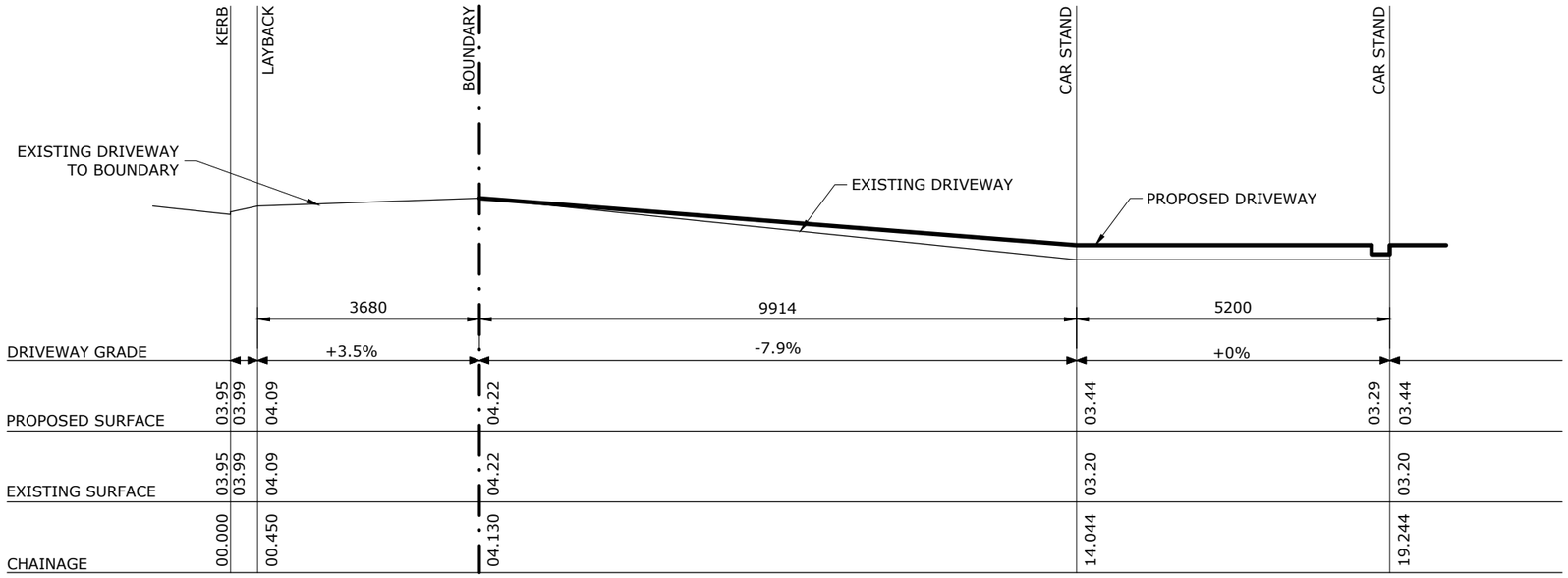

LONGITUDINAL SECTION DRIVEWAY (L2 / S10)

1:100

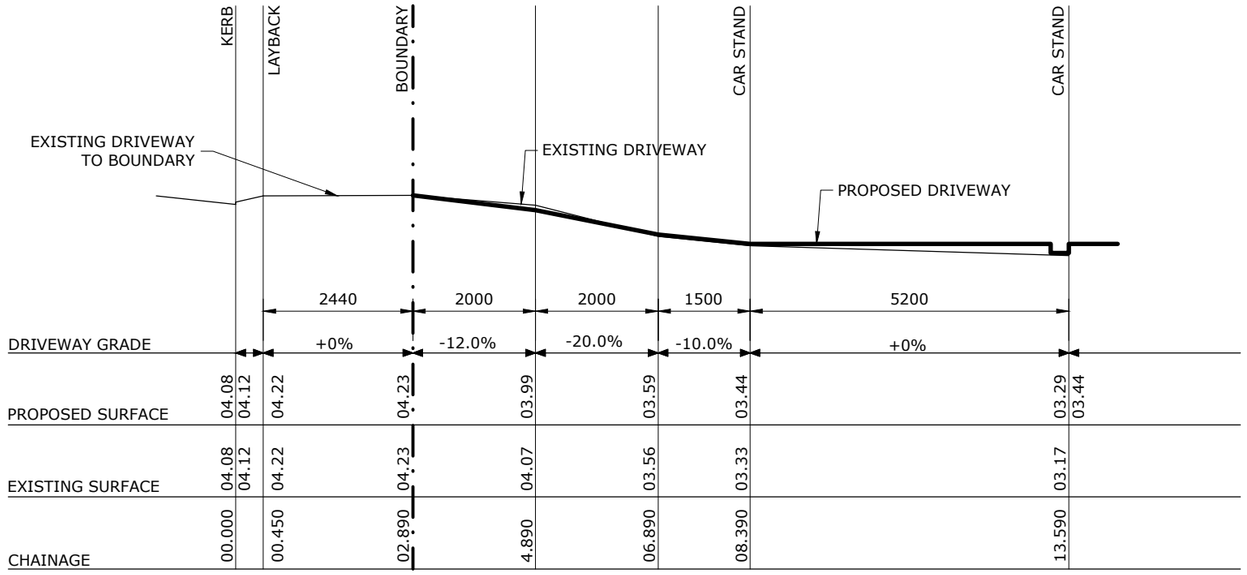

LONGITUDINAL SECTION DRIVEWAY (L1 / S10)

1:100

A3 ORIGINAL SIZE

COPYRIGHT:
E2 Civil And Structural Design Pty Ltd is the owner of the copyright subsisting in these drawings, plans, designs and specifications. They must not be used, reproduced or copied in whole or in part without prior written consent of E2 Civil And Structural Design Pty Ltd. Design is not certified unless signed.

REV.	APP.	AMENDMENT DESCRIPTION	DATE
B		GENERAL REVISIONS	02.10.20
A		FOR CONSTRUCTION	14.08.20

P.O. Box 608
WAVERLEY NSW 2024
p 02 8594 6111
f 02 8089 1051
info@E2design.com.au
www.E2design.com.au
ACN 145 358 265

E2 CIVIL AND STRUCTURAL DESIGN PTY LTD

CLIENT: HUTCHINSON

PROJECT NAME: PROPOSED ALTERATIONS 18 YACHTSMANS PARADISE NEWPORT NSW 2106

DRAWING TITLE: DRIVEWAY LONG SECTIONS (1:100)

SCALE:	DATE:	DESIGN/APPROVED:	REV:
1:100	30 Apr 2020	CB	B

PROJECT:	DRAWING:	SIGNED:
19.592	S11	

DO NOT SCALE FROM DRAWINGS - USE ONLY FIGURED DIMENSIONS

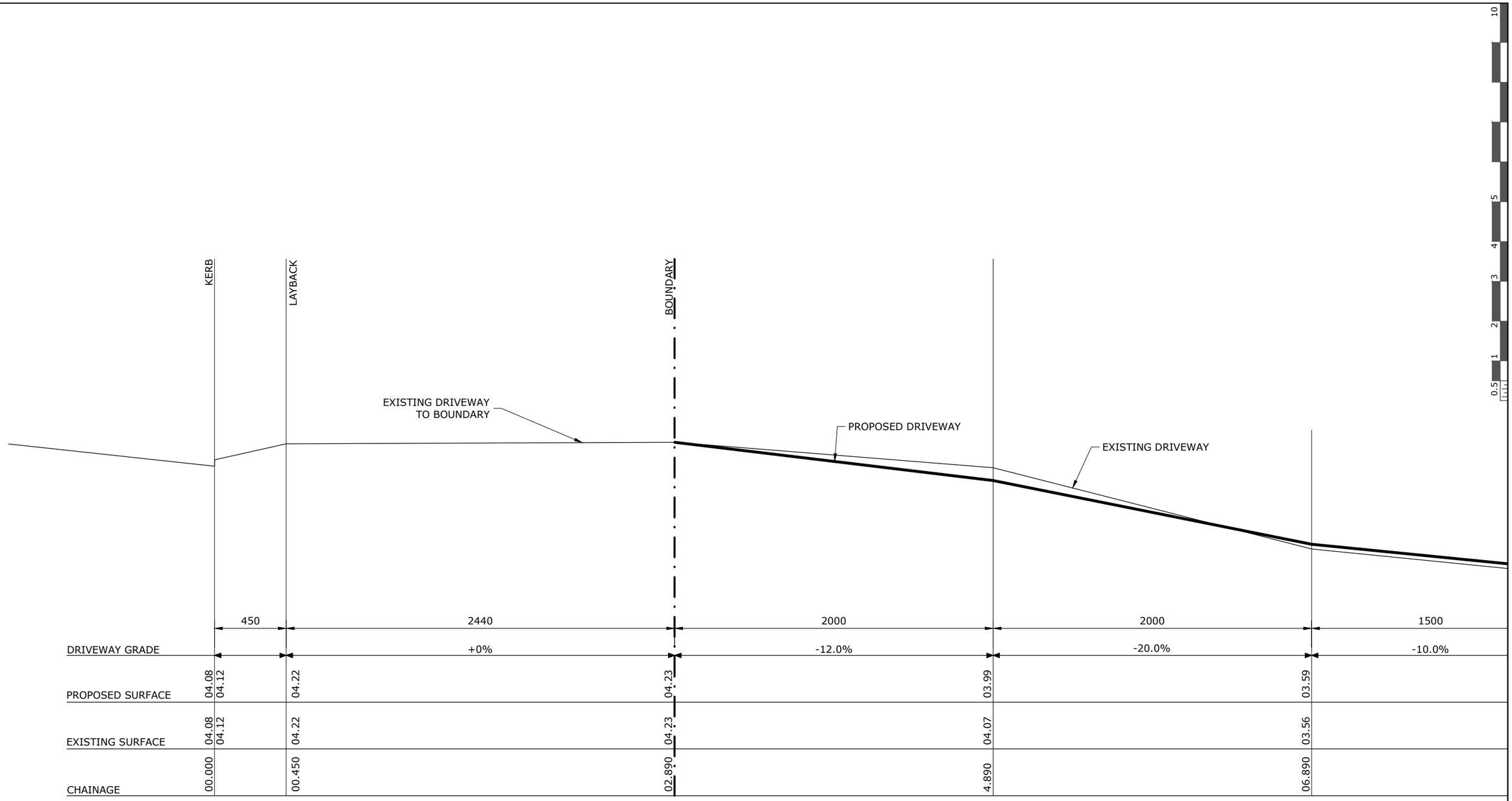

LONGITUDINAL SECTION DRIVEWAY

1:25

L1 / S10

A3 ORIGINAL SIZE

COPYRIGHT:
E2 Civil And Structural Design Pty Ltd is the owner of the copyright subsisting in these drawings, plans, designs and specifications. They must not be used, reproduced or copied in whole or in part without prior written consent of E2 Civil And Structural Design Pty Ltd. Design is not certified unless signed.

REV.	APP.	AMENDMENT DESCRIPTION	DATE
A		GENERAL REVISIONS	02.10.20
0		DRAWING ADDED	14.08.20

P.O. Box 608
WAVERLEY NSW 2024
p 02 8594 6111
f 02 8089 1051
info@E2design.com.au
www.E2design.com.au
ACN 145 358 265

E2 CIVIL AND STRUCTURAL DESIGN PTY LTD

CLIENT: HUTCHINSON

PROJECT NAME: PROPOSED ALTERATIONS 18 YACHTSMANS PARADISE NEWPORT NSW 2106

DRAWING TITLE: DRIVEWAY LONG SECTION L1 1/2

SCALE:	DATE:	DESIGN/APPROVED:	REV:
1:25	30 Apr 2020	CB	A

PROJECT:	DRAWING:	SIGNED:
19.592	S12	

DO NOT SCALE FROM DRAWINGS - USE ONLY FIGURED DIMENSIONS

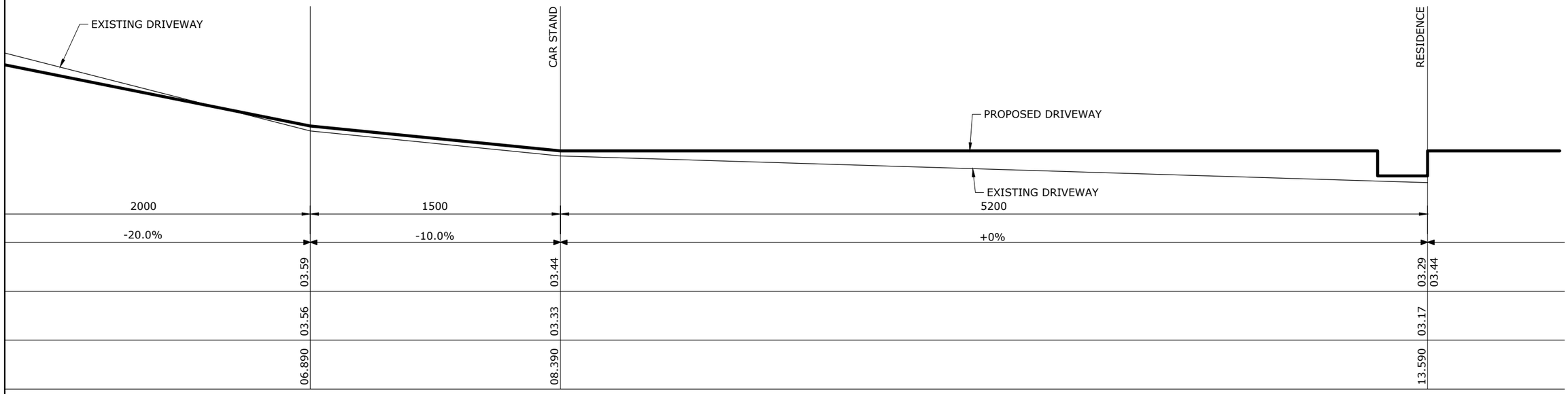

LONGITUDINAL SECTION DRIVEWAY

1:25

L1
S10

A3 ORIGINAL SIZE

COPYRIGHT:
E2 Civil And Structural Design Pty Ltd is the owner of the copyright subsisting in these drawings, plans, designs and specifications. They must not be used, reproduced or copied in whole or in part without prior written consent of E2 Civil And Structural Design Pty Ltd. Design is not certified unless signed.

REV.	APP.	AMENDMENT DESCRIPTION	DATE
A		GENERAL REVISIONS	02.10.20
0		DRAWING ADDED	14.08.20

P.O. Box 608
WAVERLEY NSW 2024
p 02 8594 6111
f 02 8089 1051
info@E2design.com.au
www.E2design.com.au
ACN 145 358 265

E2 CIVIL AND STRUCTURAL DESIGN PTY LTD

CLIENT:
HUTCHINSON

PROJECT NAME:
PROPOSED ALTERATIONS
18 YACHTSMANS PARADISE
NEWPORT NSW 2106

DRAWING TITLE:
DRIVEWAY LONG SECTION L1 2/2

SCALE:	DATE:	DESIGN/APPROVED:	REV:
1:25	30 Apr 2020	CB	A

PROJECT:	DRAWING:	SIGNED:
19.592	S13	

DO NOT SCALE FROM DRAWINGS - USE ONLY FIGURED DIMENSIONS

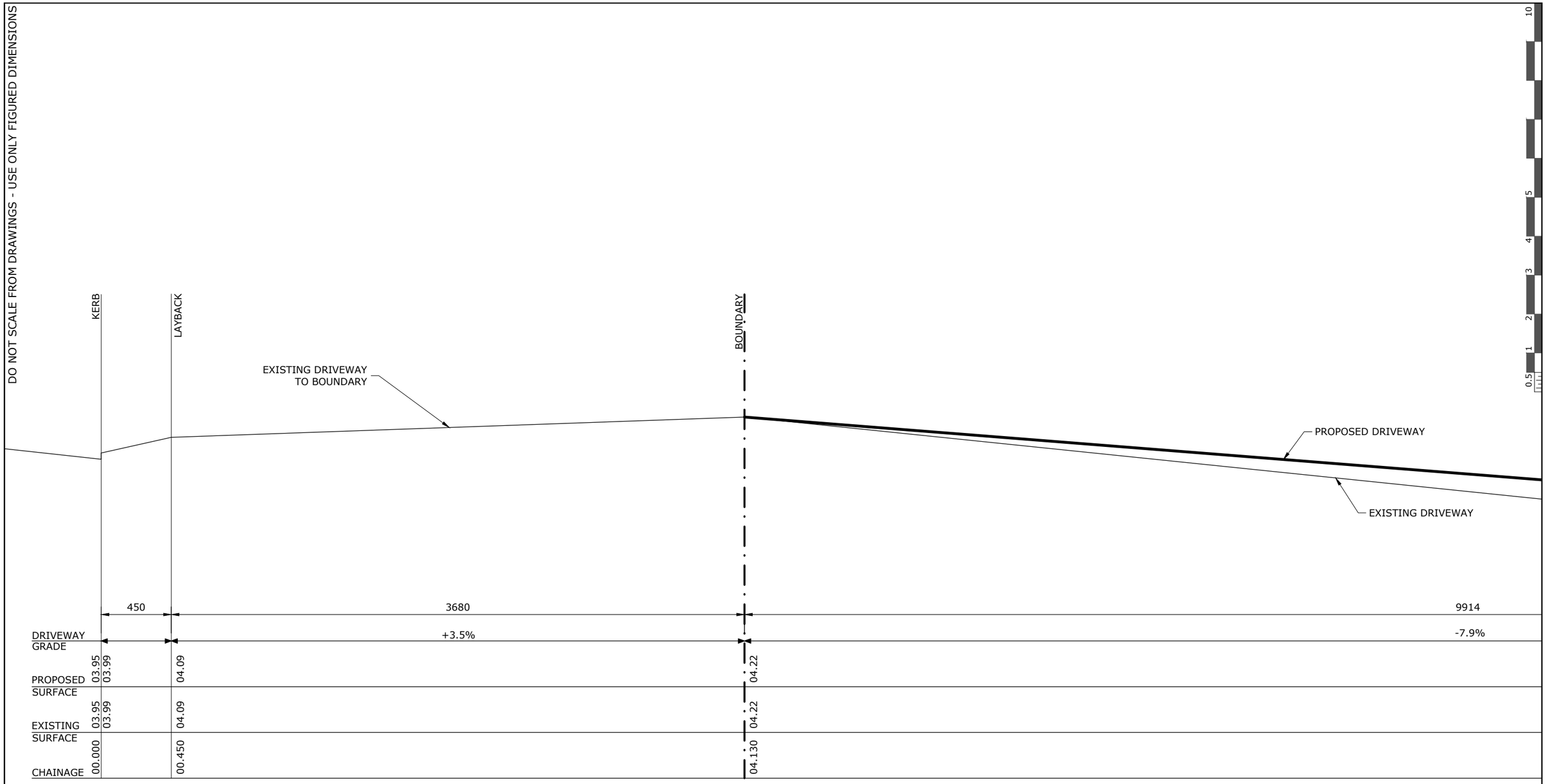

LONGITUDINAL SECTION DRIVEWAY

1:25

L2
S10

A3 ORIGINAL SIZE

COPYRIGHT:
E2 Civil And Structural Design Pty Ltd is the owner of the copyright subsisting in these drawings, plans, designs and specifications. They must not be used, reproduced or copied in whole or in part without prior written consent of E2 Civil And Structural Design Pty Ltd. Design is not certified unless signed.

REV.	APP.	AMENDMENT DESCRIPTION	DATE
A		GENERAL REVISIONS	02.10.20
0		DRAWING ADDED	14.08.20

P.O. Box 608
WAVERLEY NSW 2024
p 02 8594 6111
f 02 8089 1051
info@E2design.com.au
www.E2design.com.au
ACN 145 358 265

E2 CIVIL AND STRUCTURAL DESIGN PTY LTD

CLIENT:
HUTCHINSON

PROJECT NAME:
PROPOSED ALTERATIONS
18 YACHTSMANS PARADISE
NEWPORT NSW 2106

DRAWING TITLE:
DRIVEWAY LONG SECTION L2 1/2

SCALE:	DATE:	DESIGN/APPROVED:	REV:
1:25	30 Apr 2020	CB	A

PROJECT:	DRAWING:	SIGNED:
19.592	S14	

DO NOT SCALE FROM DRAWINGS - USE ONLY FIGURED DIMENSIONS

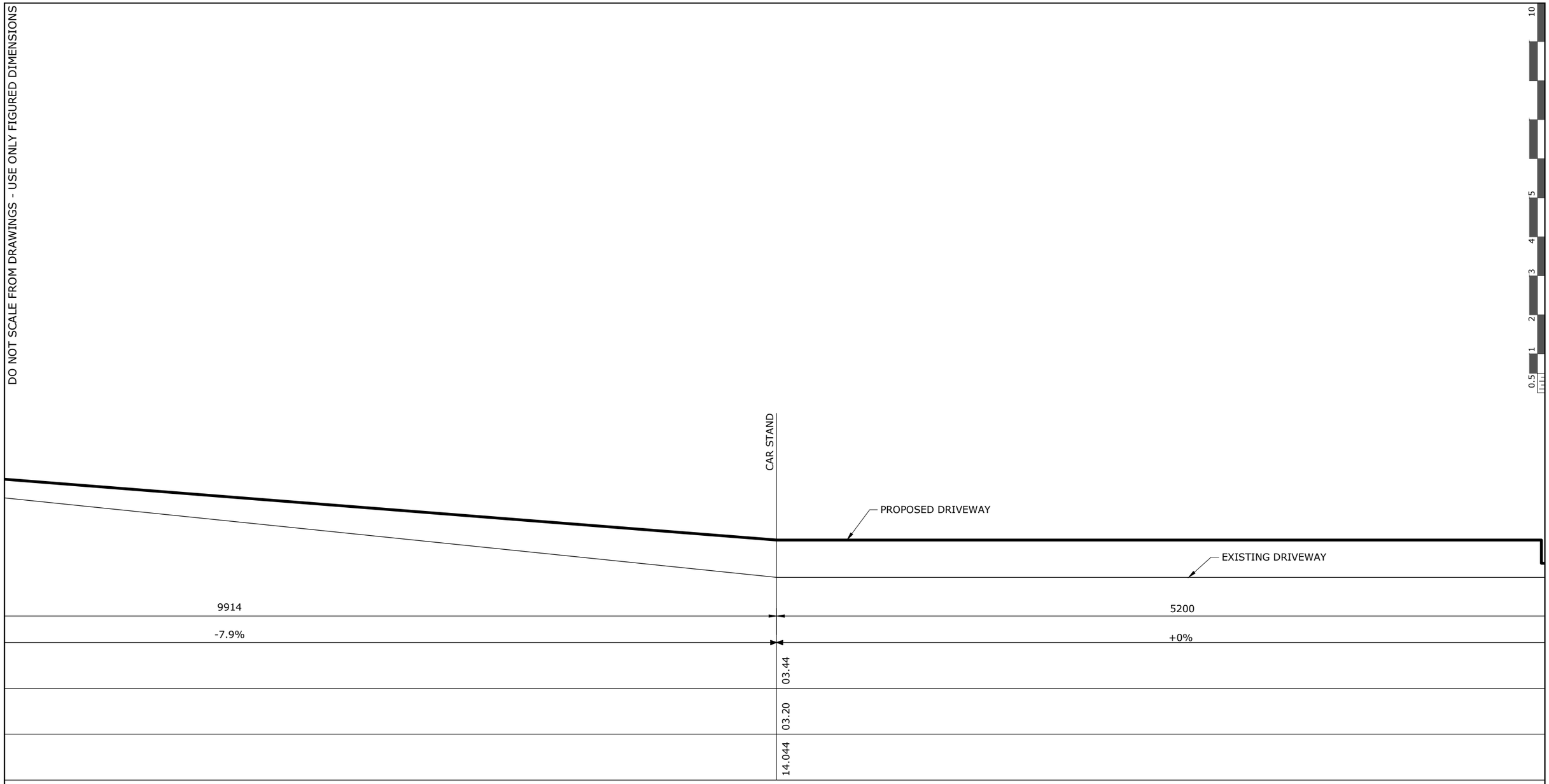

A3 ORIGINAL SIZE

COPYRIGHT:
E2 Civil And Structural Design Pty Ltd is the owner of the copyright subsisting in these drawings, plans, designs and specifications. They must not be used, reproduced or copied in whole or in part without prior written consent of E2 Civil And Structural Design Pty Ltd. Design is not certified unless signed.

REV.	APP.	AMENDMENT DESCRIPTION	DATE
A		GENERAL REVISIONS	02.10.20
0		DRAWING ADDED	14.08.20

P.O. Box 608
WAVERLEY NSW 2024
p 02 8594 6111
f 02 8089 1051
info@E2design.com.au
www.E2design.com.au
ACN 145 358 265

E2 CIVIL AND STRUCTURAL DESIGN PTY LTD

CLIENT:
HUTCHINSON

PROJECT NAME:
PROPOSED ALTERATIONS
18 YACHTSMANS PARADISE
NEWPORT NSW 2106

DRAWING TITLE:
DRIVEWAY LONG SECTION L2 2/2

SCALE:	DATE:	DESIGN/APPROVED:	REV:
1:25	30 Apr 2020	CB	A

PROJECT:	DRAWING:	SIGNED:
19.592	S15	