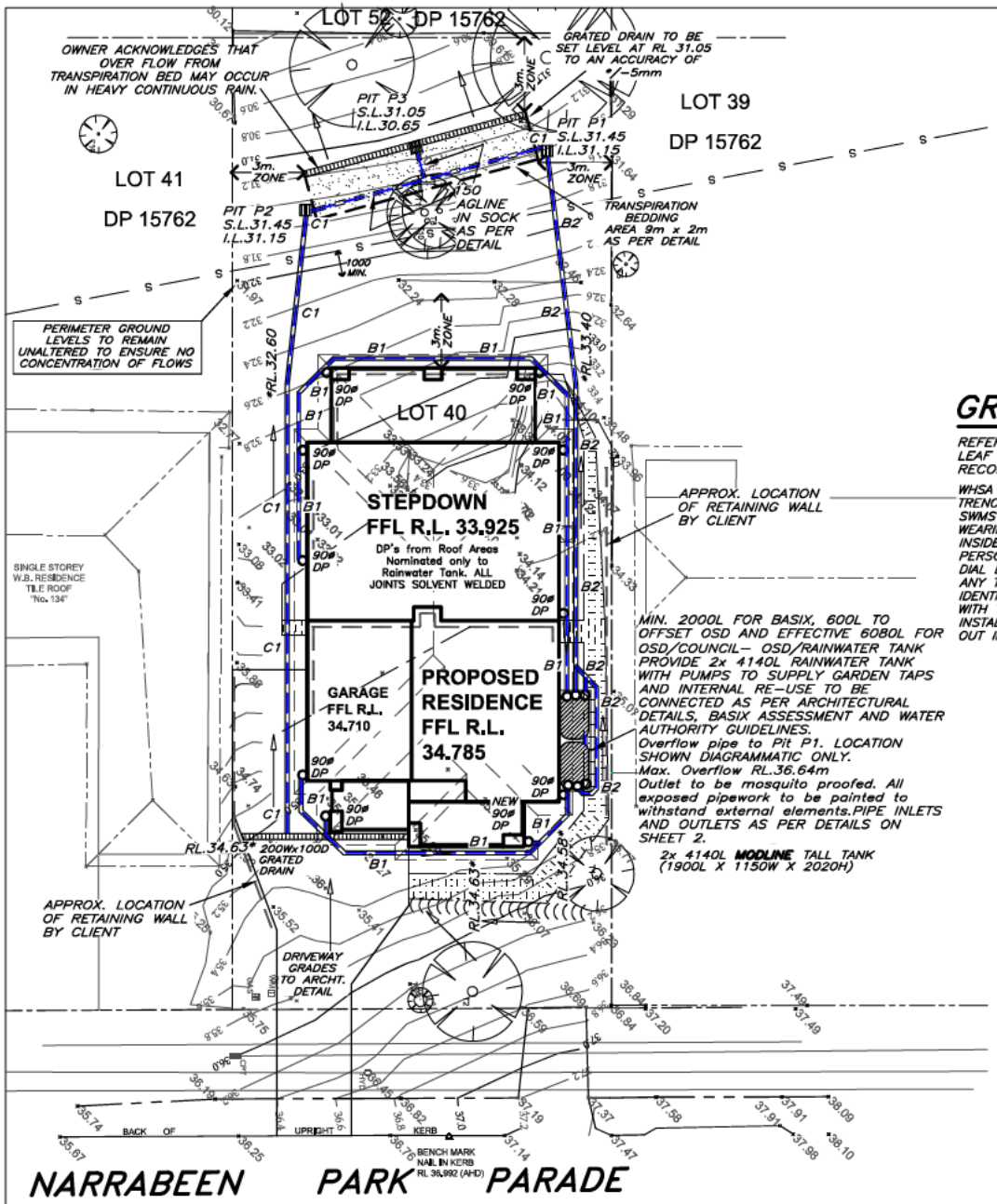

GROUND FLOOR LAYOUT

REFER TO SHEET 2 FOR RAINWATER TANK DETAILS.
LEAF GUTTER GUARDS OR SIMILAR SCREENING RECOMMENDED TO ALL GUTTERS.

WHSA HAZARD IDENTIFICATION:
TRENCHING–ALL PERSONS TO FOLLOW THEIR APPROVED SWMS IN RELATION TO BARRICADING DEEP TRENCHES AND WEARING APPROPRIATE CLOTHING. ANY PERSON WORKING INSIDE A TRENCH MUST BE SUPERVISED BY ANOTHER PERSON.
DIAL BEFORE YOU DIG 1100 MUST BE CHECKED BEFORE ANY TRENCHING COMMENCES ON SITE. ANY WORKS NEAR IDENTIFIED SERVICES TO BE CARRIED OUT IN ACCORDANCE WITH THE TRADES SWMS.
INSTALLATION OF DOWNPIPES AND GUTTERING TO BE CARRIED OUT IN ACCORDANCE WITH INSTALLERS APPROVED SWMS.

MIN. 2000L FOR BASIX, 600L TO OFFSET OSD AND EFFECTIVE 608OL FOR OSD/COUNCIL– OSD/RAINWATER TANK PROVIDE 2x 4140L RAINWATER TANK WITH PUMPS TO SUPPLY GARDEN TAPS AND INTERNAL RE–USE TO BE CONNECTED AS PER ARCHITECTURAL DETAILS, BASIX ASSESSMENT AND WATER AUTHORITY GUIDELINES.
Overflow pipe to Pit P1. LOCATION SHOWN DIAGRAMMATIC ONLY.
Max. Overflow RL.36.64m
Outlet to be mosquito proofed. All exposed pipework to be painted to withstand external elements.PIPE INLETS AND OUTLETS AS PER DETAILS ON SHEET 2.

2x 4140L **MODLINE** TALL TANK (1900L X 1150W X 2020H)

PIPE SCHEDULE

REFER TO NOTES FOR PIPE CLASS

TAG	PIPE DIA.	MIN.GRADE
B1	100	CHARGED
B2	100	4%
C1	150	1%

GRATED DRAIN BY OWNER

ALL OTHER SURFACE WATERS TO BE STRICTLY CONNECTED TO A SEPARATE SYSTEM BY OWNER IN ACCORDANCE WITH AS 3500:.3:2003 AND BCA PART 3.1.2.3.

RAINWATER TANKS WITH PUMPS TO SUPPLY GARDEN TAPS AND INTERNAL RE–USE AS PER BASIX ASSESSMENT

LEGEND

R.L. 0.00	NEW REDUCED LEVEL
(NEW FINISHED GROUND LEVEL)	
+ 00.00	EXISTING LEVEL
S.L. 0.00	SURFACE LEVEL
I.L. 0.00	INVERT LEVEL
T.O.W.	TOP OF WALL LEVEL
G.F.L.0.00	GARAGE FLOOR LEVEL
F.F.L.0.00	FINISHED FLOOR LEVEL
A,B,C etc.	SEE PIPE SCHEDULE
L1	PIPE LABEL
PIT P1	SURFACE INLET PIT
PIT OP1	OVERLAND FLOW PIT
—o—o—	90mm. AG. LINE
DP	DOWNPIPE–SIZE
REFER TO NOTES FOR DP SIZE	
GP	GULLY PIT
GP	GARDEN GULLY PIT
O/F	OVERFLOW–200x100
RWH/S	RAIN WATER HEAD/SUMP
SP	DP WITH SPREADER
BG	BALCONY GULLY PIT
CE	CLEANING EYE
——▷	GROUND FALL
))))	100 HIGH EARTH MOUNDING

STORMWATER LAYOUT NOTES

–PITS UP TO 600 DEEP TO BE 450 x 450 U.N.O., PITS UP TO 900 DEEP TO BE 600 x 600 U.N.O., PITS UP TO 1200 DEEP TO BE 900 x 600 U.N.O., PITS EXCEEDING 1200 DEEP TO BE 900 SQ. U.N.O. PITS TO BE PRECAST CONCRETE OR RENDERED BRICK WITH CONCRETE HEAVY DUTY GRATES. U.N.O. LIGHT DUTY PITS AND GRATES MAY BE USED ONLY IN LIGHT/FOOT TRAFFICABLE AREAS. U.N.O. ALL PITS TO BE BENCHED TO DISCHARGE PIPES U.N.O. GAL. STEP IRONS TO ALL PITS EXCEEDING 900 DEPTH.
–COVER AND SUMP GRATES SHALL COMPLY WITH AS2733 & AS4198.
–DOWNPIPES TO BE 90 DIA IF CHARGED AND 100 x 50 BOX IF GRAVITY. U.N.O. DP'S SHALL BE INSTALLED IN ACCORDANCE WITH AS3500.3.2:4.11 & AS4198. MAX. ROOF AREA PER DOWNPIPE WITH A NOMINATED GUTTER SIZE TO BE DETERMINED USING MANUFACTURERS SPECIFICATIONS WITH OVERFLOW PROVISIONS BY INSTALLERS.
–PIPES TO HAVE 1% MIN.GRADE U.N.O. BY PIT INVERTS. PIPES TO BE V.C. CLASS 'X' OR U.P.V.C. CLASS STORMWATER PIPE TO AS1254,1260,1273,1477,2179.2 AND WHERE EXPOSED TO DIRECT SUNLIGHT TO HAVE ADEQUATE PROTECTION TO U.V. RADIATION IN ACCORDANCE WITH AS2032. SEWER GRADE/GAL. PIPES AND KERB ADAPTORS TO BE USED WHERE COUNCIL POLICY OR CONSENT REQUIRE SUCH.
–GUTTER OUTLETS SHALL BE FITTED VERTICALLY TO THE SOLE OF THE EAVE GUTTERS. RAINHEADS TO HAVE AN OVERFLOW DUCT OR WEIR 50mm BELOW THEIR CREST.
–PROVIDE OVERFLOW SPITTERS TO ALL COVERED BALCONIES/ TERRACES. NOT TO BE DIRECTED ON TO ROOF SURFACES
–RISING MAINS (PRESSURE PIPE) TO BE IN ACCORDANCE WITH AS.3500.1:2.
–SUBSOIL DRAINS TO BE IN ACCORDANCE WITH AS2439.1 CLASS 100 TO BE USED ONLY IN SINGLE DWELLINGS.
–ALL PIPE JOINTS, VALVES TO BE IN ACCORDANCE WITH AS3500.3.2:2.7 & AS3500.3.2
–EXPANSION JOINTS SHALL COMPLY WITH AS3500.3.2:TABLE 4.1 PVC JOINTS AND ACCESSORIES TO COMPLY WITH AS2179.2 & AS4198.
–ALL TRENCHES TO BE IN ACCORDANCE WITH AS3500.3.2:7.2.8–14. EMBEDMENT MATERIAL AND TRENCH FILL TO ALL PIPES & SUBSOIL,DRAINS TO BE IN ACCORDANCE WITH AS3500.3.2:7. ALL WORKS TO BE IN ACCORDANCE WITH AS1254, 1741, 2032, 2733, 2865, 3996, 1260, 1477, 2179.1 & 2,2566, 6367, 8301, ARR97 & BCA.
–IT IS THE BUILDER'S RESPONSIBILITY TO CONFIRM THAT LEVELS AND SURVEYS ARE IN ACCORDANCE WITH LEVELS ON SITE & ARE APPROVED BY COUNCIL & ARCHITECT BEFORE COMMENCING WORK.
–NO SEWER VENTS, GULLY PITS OR SIMILAR TO BE LOCATED BELOW THE MAXIMUM WATER SURFACE LEVEL IN DETENTION BASINS. ALL BASIN WALLS TO BE WATERTIGHT & STRUCTURALLY DESIGNED BY A STRUCTURAL ENGINEER.
–ALL FENCES WHICH MAY DIVERT FLOW FROM PROPOSED DIRECTION TO BE RAISED 100mm.
–BUILDER TO ENSURE ALL DRAINAGE AREAS INCLUDING EXPOSED BALCONIES TO HAVE OVERFLOW MECHANISM IN PLACE IN THE EVENT OF BLOCKAGE WITH ADEQUATE OVERFLOW SECTION THROUGH PLANTERS, PARAPETS ETC.
–ALL EXTERIOR FINISHED GROUND LEVELS TO BE SLOPING AWAY FROM PERIMETER WALLS IN ALL CASES.
–ALL HEADROOM CLEARANCES TO BE COORDINATED BETWEEN BUILDER & ARCHITECT. NOTIFY ENGINEER FOR APPROVAL IF ANY CHANGES OCCUR.
–ALL GULLY POSITIONS ARE DIAGRAMMATIC ONLY– BUILDER SHOULD CONSULT ARCHITECTURALS FOR DIMENSIONS TO LOCATE STORMWATER ELEMENTS U.N.O.
–FIRE RATING TO ARCHITECT'S SPECIFICATION.
–ALL FINISHED FLOOR LEVELS ARE NOMINATED BY ARCHITECT.
–ALL SITE SAFETY MEASURES AND WORK METHOD STATEMENTS PREPARED BY BUILDER/SUB–CONTRACTORS ARE TO BE IMPLEMENTED DURING CONSTRUCTION. NO WORK IS TO COMMENCE UNTIL ALL WORKERS CARRY OUT SITE INDUCTION, PREPARED AND CARRIED OUT BY BUILDER. ANY HAZARD IDENTIFICATION TO BE REPORTED IMMEDIATELY TO SITE SUPERVISOR TO CARRY OUT NECESSARY PROCEDURES TO ELIMINATE HAZARD, PRIOR TO PROCEEDING WITH WORK. STRUCTURAL AND GEOTECHNICAL ADVICE SHOULD BE SOUGHT IN ALL CASES.
–CONFINED SPACES SIGNAGE TO BE INSTALLED IN ACCESSIBLE UNDERGROUND TANKS TO WORK COVER SPECIFICATIONS. ALL PITS EXCEEDING 600mm DEPTH TO HAVE 'J' BOLTS OR SIMILAR INSTALLED TO GRATES.
–MAINTENANCE DEVICES REQ'D BY AUTHORITIES ARE NOT TO BE ASSUMED SHOWN ON DRAWINGS.
–EARTH MOUNDING SHOWN AS TEMPORARY MEASURE UNTIL LANDSCAPING COMPLETED TO DIRECT FLOWS AS SHOWN.

NORTH

THIS DRAWING IS DIAGRAMMATIC ONLY & NOT TO BE SCALED. IT IS NOT A PART 4A CERT. REFER TO ARCHITECTS DRAWINGS FOR DIMENSIONS.COPYRIGHT IN THIS DRAWING IS THE PROPERTY OF IBRAHIM STORMWATER CONSULTANTS AND THE DRAWING SHALL NOT BE REPRODUCED OR COPIED, WHOLE OR IN PART, IN ANY FORM WITHOUT THE PRIOR WRITTEN APPROVAL OF IBRAHIM STORMWATER CONSULTANTS

REVISIONS

ISSUE	PRINTS	ISSUED TO	DATE
1	EMAIL	BUILDER/CLIENT	28–1–20

SCALE(A3) 1:200,100 u.n.o.
SCALE BAR – 1m INTERVALS
DATE OCT . 2019
DRAWN M.I.
DESIGNED M.I.
APPROVED

IBRAHIM STORMWATER CONSULTANTS
CONSULTING CIVIL ENGINEERS
P.O. BOX 400 CHERRYBROOK NSW 2126
TELEPHONE: (02) 9980 5515 FAX: (02) 9980 6114
www.stormwater.net.au email: mail@stormwater.net.au

PROJECT
PROPOSED RESIDENCE AT 136 NARRABEEN PARK PARADE MONA VALE, FOR [redacted]

THIS DRAWING
STORMWATER LAYOUT SH.1

BUILDER
METRICON HOMES

JOB NUMBER
M9323–704711

SHEET No. **1 of 2**

REVISION **.**

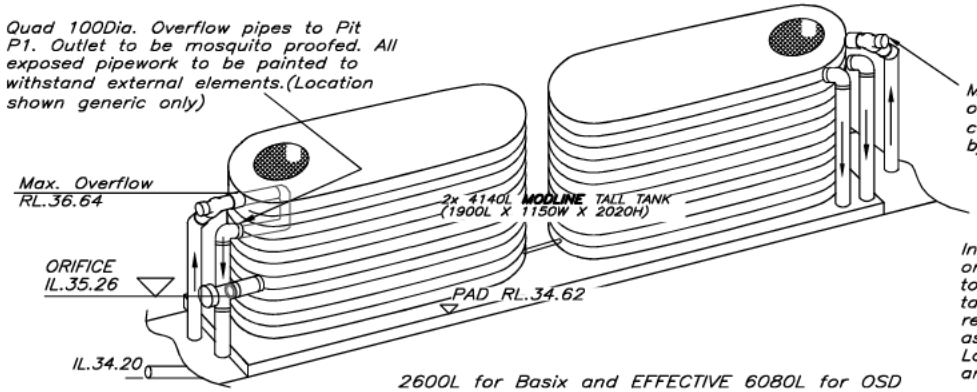

RAINWATER TANK

2600L for Basix and EFFECTIVE 6080L for OSD
USE 2 x 4140L Rainwater tank/s, to manufacturer's and Sydney Water's specifications.

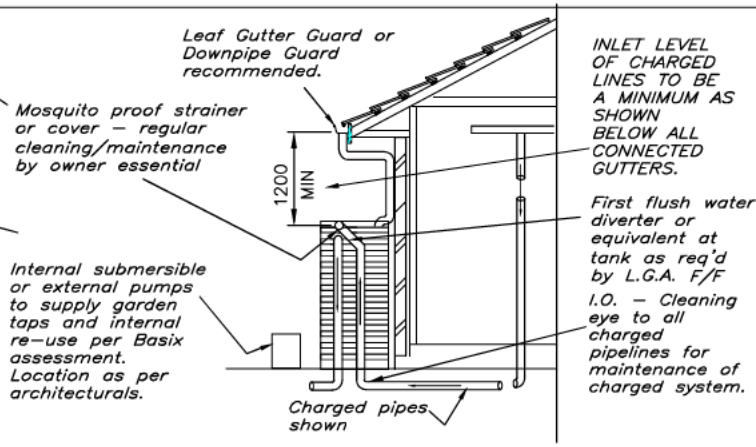

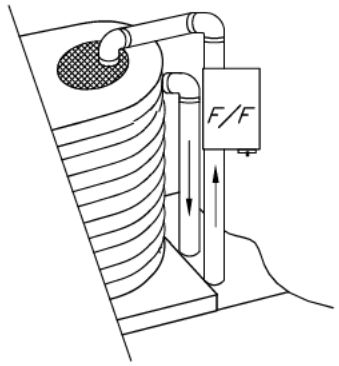

TYPICAL ALTERNATIVE INLET SYSTEM SHOWN DIAGRAMMATICALLY ONLY

TANK DETAILS SHOWN ARE A SUGGESTED CONFIGURATION ONLY. ANY MODIFICATIONS TO TANK VOLUME OR INLET AND OUTLET LEVELS MUST BE APPROVED BY ENGINEER PRIOR TO COMMENCEMENT OF CONSTRUCTION. TANK SHAPE, & DEVICES SHOWN ARE DIAGRAMMATIC ONLY. MINIMUM OF 450 CLEARANCE (UNLESS L.G.A. REQUIRES LARGER SETBACK) TO SIDE BOUNDARIES MUST BE MAINTAINED. CLIENT IS RESPONSIBLE TO ENSURE COMPLIANCE WITH THIS IN THE INSTALLED STATE.
Charged stormwater lines from Roof Areas ONLY to rainwater tank.
All joints to be solvent welded. All exposed pipework to be painted to withstand external elements.
First flush water diverter at tank to comply with Sydney Water and council DCP's. An approved switch system similar to 'Rainbank' to be used via mains. Pumps to manuf. specs.
Rain Tank to be installed and maintainted to manufacturers specifications and to comply with all Sydney Water Guidelines.
Client to be responsible for maintenance system of charged pipelines. Debris accumulation significantly affects systems performance. Maintenance program essential.
Structural details for tank base by manufacturer or others.

WHSA HAZARD IDENTIFICATION:
INSTALLATION OF RAINTANKS: PLUMBER/SITE SUPERVISOR TO ASSESS ACCESS SUITABILITY PRIOR OR POST SLAB CONSTRUCTION.
INSTALLATION OF TANKS TO BE CARRIED OUT FOLLOWING SWMS OF TANK SUPPLIER AND PLUMBER. APPROPRIATE GLOVES TO BE WORN AT ALL TIMES WHILE HANDLING TANKS.

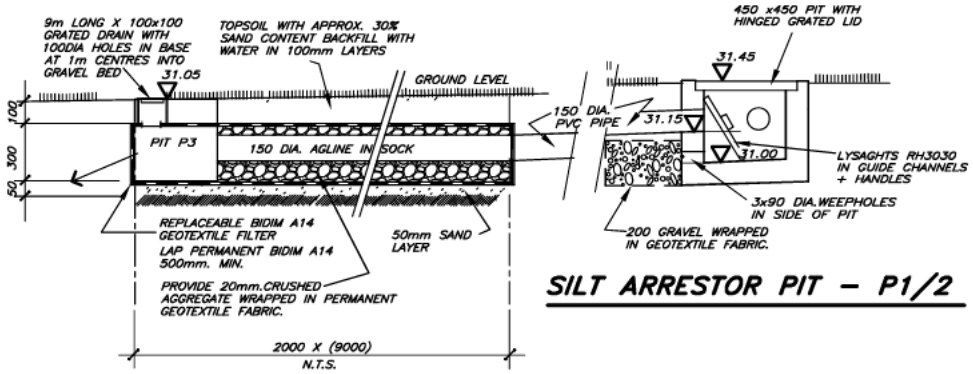

SILT ARRESTOR PIT – P1/2

TRANSPIRATION/DISPERSAL BEDDING

TRENCHES TO BE LOCATED PARALLEL TO NATURAL CONTOURS OF SITE.
STRICTLY NO PAVING OR HARD SURFACES TO BE CONSTRUCTED OVER TRENCHES.
Geotech Engineers Recommendation to be adhered too: "construction of the trench should incorporate roughening of the base and sides of the trench to reduce smearing that may be caused during excavation. Roughening could be achieved by tyning the base of the trench and vertical grooving the sides.
Trafficking of the base of the trench should be avoided during construction of the absorption trench. Trench design and construction should incorporate suitable geofabric lining to the base, sides and top of the trench."

THIS IS AN
ON-SITE STORMWATER DETENTION SYSTEM
REQUIRED BY YOUR LOCAL COUNCIL

IT IS AN OFFENSE TO REDUCE THE VOLUME OR TO INTERFERE WITH THE ORIFICE PLATE THAT CONTROLS THE OUTFLOW
THE BASE OF THE OUTLET CONTROL PIT AND DEBRIS SCREEN MUST BE CLEANED OF DEBRIS AND SEDIMENT ON A REGULAR BASIS BY THE OWNER.

THIS PLATE MUST NOT BE REMOVED

Signange to be provided adjacent tanks
Size: 110 mm x 80mm

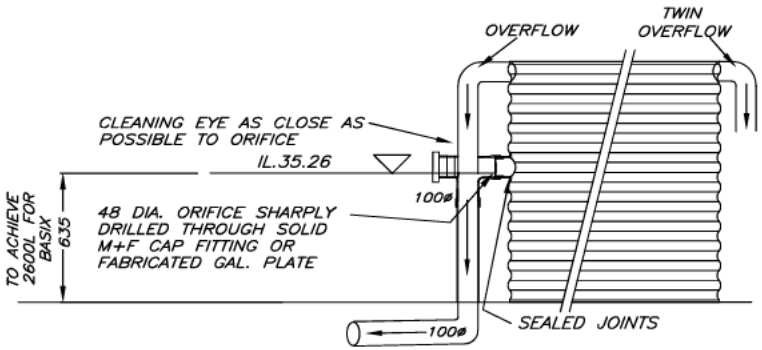

OSD OUTLET DETAIL

BUILDER/CLIENT TO ENSURE THAT ALL SAFETY MEASURES ARE TAKEN DURING CONSTRUCTION, INCLUDING BUT NOT LIMITED TO, SAFETY FENCING, SIGNAGE, OBTAINING STRUCTURAL AND GEOTECHNICAL ADVICE WHERE EXCAVATIONS ARE NEAR STRUCTURES OR SERVICES, SAFETY MEASURES RECOMMENDED BY PRODUCT SUPPLIERS ETC.

THIS DRAWING IS DIAGRAMMATIC ONLY & NOT TO BE SCALED. IT IS NOT A PART 4A CERT. REFER TO ARCHITECTS DRAWINGS FOR DIMENSIONS. COPYRIGHT IN THIS DRAWING IS THE PROPERTY OF IBRAHIM STORMWATER CONSULTANTS AND THE DRAWING SHALL NOT BE REPRODUCED OR COPIED, WHOLE OR IN PART, IN ANY FORM WITHOUT THE PRIOR WRITTEN APPROVAL OF IBRAHIM STORMWATER CONSULTANTS

REVISIONS

ISSUE	PRINTS	ISSUED TO	DATE
1	EMAIL	BUILDER/CLIENT	28-1-20

SCALE(A3) 1:200,100 u.n.o.
SCALE BAR – 1m INTERVALS
DATE OCT . 2019
DRAWN M.I.
DESIGNED M.I.
APPROVED

IBRAHIM STORMWATER CONSULTANTS
CONSULTING CIVIL ENGINEERS
P.O. BOX 400 CHERRYBROOK NSW 2126
TELEPHONE: (02) 9980 5515 FAX: (02) 9980 6114
www.stormwater.net.au email: mail@stormwater.net.au

PROJECT
PROPOSED RESIDENCE AT 136 NARRABEEN PARK PARADE, MONA VALE, FOR [redacted]

THIS DRAWING
STORMWATER DETAILS SH.1

BUILDER
METRICON HOMES

JOB NUMBER
M9323-704711

SHEET No.
2 of 2

REVISION