46 THE AVENUE, NEWPORT
NOTE SHEET

GENERAL NOTES:

G1 THESE DRAWINGS AND NOTES SHALL BE READ IN CONJUNCTION WITH ALL ARCHITECTURAL AND OTHER CONSULTANT'S DRAWINGS, REPORTS, SPECIFICATIONS AND ANY OTHER WRITTEN INSTRUCTIONS AS MAY BE ISSUED DURING THE COURSE OF CONSTRUCTION. ALL DISCREPANCIES SHALL BE REFERRED TO THE ENGINEER FOR CLARIFICATION OR DECISION BEFORE PROCEEDING WITH THE WORK.

G2 CONSTRUCTION FROM THESE DRAWINGS SHALL NOT COMMENCE UNTIL THEY ARE APPROVED BY THE RELEVANT AUTHORITIES.

G3 DIMENSIONS SHALL NOT BE OBTAINED FROM THE STRUCTURAL DRAWINGS BY WAY OF SCALING (OR DETERMINING UNDIMENSIONED MEASUREMENTS FROM THE ELECTRONIC DRAWING). WALL, PIER, AND COLUMN THICKNESS', AND STRUCTURAL MEMBER SIZES SHOWN ON THESE DRAWINGS SHALL TAKE PRECEDENCE OVER THOSE SHOWN ON THE ARCHITECT'S DRAWINGS. THE BUILDER SHALL VERIFY ALL DIMENSIONS ON SITE AND BE RESPONSIBLE FOR THE SETTING OUT OF THE BUILDING.

G4 ELEMENTS INDICATED ON THESE DRAWINGS ARE SHOWN IN THEIR INTENDED COMPLETE STATE. THE BUILDER SHALL PROVIDE ANY TEMPORARY WORKS INCLUDING PROPPING, BRACING, SHORING AND ANY OTHER REQUIREMENTS NECESSARY TO MAINTAIN THE STRUCTURE, OR ANY PART OF IT, IN A STABLE CONDITION DURING CONSTRUCTION. IF THE BUILDER IS IN ANY DOUBT AS TO HOW TO ACHIEVE THIS HE SHALL OBTAIN ADVICE FROM APPROPRIATELY QUALIFIED AND EXPERIENCED PERSONNEL. UNLESS STATED OTHERWISE TEMPORARY WORKS SHALL BE THE BUILDERS RESPONSIBILITY.

G5 THE BUILDING SHALL NOT BE ERECTED ON OR ADJACENT TO ANY OF THE FOLLOWING HAZARDS UNLESS THE HAZARD IS INDICATED ON THE STRUCTURAL DRAWING:- EMBANKMENTS, BATTERS, WATER RETAINING STRUCTURES, RETAINING WALLS, PITS, SEWERS, SERVICE TRENCHES, DRAINAGE CHANNELS, STREAMS OR ANY POTENTIAL SOURCE OF DAMAGE TO THE STRUCTURE. IF ANY SUCH HAZARDS ARE ENCOUNTERED THE ENGINEER SHALL BE NOTIFIED AND HIS APPROVAL OBTAINED BEFORE PROCEEDING.

G6 THE BUILDER SHALL LOCATE ALL EXISTING AND PROPOSED SERVICES AND EASEMENTS, ON AND ADJACENT TO THE SITE. THE APPROVAL OF THE RELEVANT STATUTORY AUTHORITY AND THE ENGINEER SHALL BE OBTAINED BEFORE BUILDING ON OR OVER ANY SERVICES OR EASEMENTS.

G7 THE BUILDER SHALL NOT EXCAVATE BELOW THE LEVEL OF THE FOOTINGS TO ANY EXISTING BUILDINGS WITHOUT THE WRITTEN CONSENT OF THE ENGINEER.

G8 THE WRITTEN CONSENT OF ADJOINING PROPERTY OWNERS SHALL BE OBTAINED BEFORE INSTALLATION OF UNDERPINNING, ANCHORING WORK, DRAINAGE LINES OR ANY OTHER WORK BEYOND THE PROPERTY BOUNDARY.

G9 NO HOLES OR CHASES SHALL BE MADE IN ANY STRUCTURAL ELEMENT, UNLESS SHOWN ON THESE DRAWINGS OR WRITTEN APPROVAL OF THE ENGINEER.

G10 A FULL DEPTH 'V' JOINT SHALL BE STRUCK IN RENDER WHERE TWO DIFFERING STRUCTURAL MATERIALS ABUT. i.e. AT THE JUNCTION OF MASONRY WITH CONCRETE.

G11 ALL WORKMANSHIP AND MATERIALS SHALL BE IN ACCORDANCE WITH THE RELEVANT AUSTRALIAN STANDARDS, THE BUILDING CODE OF AUSTRALIA, AND THE REQUIREMENTS OF THE RELEVANT STATUTORY AUTHORITIES. ALL WORKMANSHIP SHALL BE CONSISTENT WITH GOOD TRADE PRACTICE.

G12 WATERPROOFING REQUIREMENTS SHALL BE SPECIFIED BY THE ARCHITECT AND ARE NOT NECESSARILY INDICATED ON THESE DRAWINGS.

G13 AUSTRALIAN STANDARDS REFERRED TO ON THESE DRAWINGS SHALL BE THE LATEST REVISIONS OF THE NOMINATED STANDARD.

G14 APPROVAL OF A SUBSTITUTION OR ALTERNATIVE FROM THE ENGINEER IS NOT, IN ITSELF AUTHORISATION FOR A VARIATION.

G15 THE ENGINEER SHALL BE GIVEN 48 HOURS NOTICE FOR INSPECTIONS.
G16 THE WORD ENGINEER AS USED IN THESE NOTES REFERS TO AN EMPLOYEE OR NOMINATED REPRESENTATIVE OF GREENWOOD CONSULTING ENGINEERS

LOADING:

L1 SUPERIMPOSED LOADS ARE GENERALLY IN ACCORDANCE WITH AS 1170 AND AS NOTED.
L2 WIND LOADS ARE IN ACCORDANCE WITH AS 1170 AS FOLLOWS :-
BASIC WIND VELOCITY (REGION A) = 26 m/s
TERRAIN CATEGORY 3

FOUNDATIONS:

F1 FOOTINGS HAVE BEEN DESIGNED FOR THE FOLLOWING BEARING PRESSURES:
BASED ON ASSUMED 'M' CLASS SITE FOR CONSTRUCTION WITH MINIMUM BEARING CAPACITY OF 150 kPa

F2 FOOTINGS HAVE BEEN DESIGNED IN ACCORDANCE WITH AS2870 – GROUND CONDITIONS TO BE CONFIRMED ONSITE BY GEOTECHNICAL ENGINEER

F3 IF REQUIRED BY GREENWOOD CONSULTING ENGINEERS FOUNDATION MATERIAL SHALL BE APPROVED BY THE CONSULTING GEOTECHNICAL ENGINEER PRIOR TO PLACEMENT OF CONCRETE.

F4 FOOTING EXCAVATIONS AND PIER HOLES TO BE KEPT FREE OF WATER. IF BEARING SURFACE OR SIDES ENGINEER PRIOR TO PLACEMENT OF CONCRETE.

F5 ALL THE REQUIREMENTS OF THE GEOTECHNICAL REPORT FOR THE SITE SHALL BE OBSERVED AND MET.

F6 FOOTINGS SHALL BE CONCRETED ON THE SAME DAY OF SITE INSPECTION/APPROVAL UNLESS PERMISSION IS GIVEN OTHERWISE TO AVOID SOFTENING OR DRYING OUT.

F7 FOOTINGS SHALL BE LOCATED CENTRALLY UNDER WALLS AND COLUMNS UNLESS NOTED OTHERWISE

F8 BACKFILL TO RETAINING WALLS SHALL BE FREE DRAINING GRANULAR MATERIAL. PROVIDE SUBSOIL DRAIN AT BASE OF WALL. DO NOT BACKFILL UNTIL 14 DAYS AFTER CORE FILLING, OR IF APPLICABLE, AFTER ESTRAINING SLAB OVER HAS BEEN CURED FOR 7 DAYS. BACKFILL SHALL BE COMPACTED TO 98% STANDARD MAXIMUM DRY DENSITY WITHIN 2% OF OPTIMUM MOISTURE CONTENT.

CONCRETE:

EXPOSURE CLASSIFICATION EXTERNAL - A2
INTERNAL - A1

CONCRETE

Place concrete of the following characteristic compressive strength f'c as defined in AS 1379.

CONCRETE SPECIFICATION TABLE

LOCATION	f'c MPa AFTER 28 DAYS	SPECIFIED SLUMP	NOMINAL AGG SIZE
PAD FOOTINGS	32	80	20
SLAB	50	80	20
CORE FILLING GROUT	20	230 (+/-) 20	10

C1 ALL WORKMANSHIP AND MATERIALS SHALL BE IN ACCORDANCE WITH AS 3600 AND ANY OTHER RELEVANT AUSTRALIAN STANDARDS UNLESS VARIED BY THE ENGINEER.

C2 HOLES, PENETRATIONS, CHASES AND CONSTRUCTION JOINTS, OTHER THAN THOSE SHOWN ON THE STRUCTURAL DRAWINGS SHALL NOT BE MADE IN CONCRETE MEMBERS WITHOUT THE PRIOR APPROVAL OF THE ENGINEER.

C3 CONSTRUCTION JOINTS SHALL BE PROPERLY FORMED WHERE VERTICAL. THE FIRST POUR SHALL BE THOROUGHLY SCABBLED AND CLEANED OF ALL POORLY COMPACTED MATERIAL AND LAITANCE, THOROUGHLY SOAKED AND PAINTED WITH A 2:1 SAND CEMENT SLURRY IMMEDIATELY BEFORE PLACING THE SECOND POUR. THOROUGHLY COMPACT THE SECOND POUR AGAINST THE FIRST POUR.

C4 CONDUITS, PIPES AND THE LIKE SHALL BE PLACED WITHIN THE MIDDLE THIRD OF THE SLAB DEPTH AND AT A MINIMUM SPACING OF NOT LESS THAN 3 DIAMETERS. CONDUITS AND PIPES SHALL NOT BE PLACED WITHIN THE CONCRETE COVER OUTLINED BELOW.

C5 THE FINISHED CONCRETE SHALL BE FULLY MECHANICALLY VIBRATED TO ACHIEVE FULL COMPACTION, COMPLETELY FILLING FORMWORK, THOROUGHLY EMBEDDING THE REINFORCEMENT AND FREE OF STONE POCKETS. ALL CONCRETE, INCLUDING SLABS ON GROUND AND FOOTINGS, SHALL BE FULLY VIBRATED USING A HIGH FREQUENCY MECHANICAL VIBRATOR.

C6 ALL CONCRETE SHALL BE PROPERLY CURED. CURING SHALL COMMENCE WITHIN 2 HOURS OF POURING AND SHALL CONTINUE FOR A MINIMUM OF 7 DAYS, FOLLOWED BY A GRADUAL DRYING OUT. CURING SHALL BE BY CONTINUOUS SATURATION WITH POTABLE WATER OR BY USE OF AN APPROVED PROPRIETARY CURING COMPOUND COMPLYING WITH AS 3799, APPLIED UNIFORMLY IN ACCORDANCE WITH THE MANUFACTURERS INSTRUCTIONS. THE COMPATIBILITY OF CURING COMPOUNDS WITH PROPOSED APPLIED FINISHES SHALL BE VERIFIED PRIOR TO APPLICATION. FORMED SURFACES EXPOSED WITHIN 14 DAYS OF CASTING SHALL BE SPRAYED WITH AN APPROPRIATE CURING AGENT IMMEDIATELY UPON EXPOSURE.

C7 SEE CONCRETE SPECIFICATION TABLE ABOVE.

C8 WHERE A VAPOUR BARRIER IS SPECIFIED BENEATH SLABS ON GROUND PROVIDE A 0.2mm BRANDED POLYTHENE MEMBRANE THROUGHOUT. LAP SHEETS 300mm AND SEAL WITH A 50mm WIDE PRESSURE SENSITIVE WATERPROOF TAPE.

C9 WHERE CONCRETE SLABS BEAR ON MASONRY, INCLUDING CORED BRICKS, THE BEARING SURFACE OF THE MASONRY SHALL BE RENDERED WITH 1:3 CEMENT SAND MORTAR TO GIVE A LEVEL SURFACE AND A METAL SLIP JOINT LAID PROTECTED BY 0.2mm POLYTHENE SHEET TAPED TO FORMWORK BEFORE PLACING CONCRETE.

C10 NON LOADBEARING MASONRY SHALL BE SEPARATED FROM THE SOFFIT OF SLABS AND BEAMS BY 12mm CANITE OR OTHER MEANS APPROVED BY THE ENGINEER.

C11 BEFORE THE COMMENCEMENT OF CONCRETING THE BUILDER SHALL ENSURE THE CONCRETOR IS FULLY AWARE OF ANY AREAS OF FORMWORK THAT HAVE BEEN PRE-CAMBERED OR PRE-SET. EXTREME CARE MUST BE TAKEN TO ENSURE THE SPECIFIED DEPTHS OF BEAMS AND SLABS ARE ACHIEVED IN AREAS OF PRE-SET OR PRE-CAMBERED FORMWORK. THIS CANNOT BE ACHIEVED BY LEVELLING THE CONCRETE SURFACE INTO THE NOMINAL FINISHED CONCRETE LEVEL.

C12 CONSTRUCTION AND SUPPORT PROPPING SHALL BE ADDED, OR LEFT IN PLACE, TO AVOID OVERSTRESSING THE STRUCTURE DUE TO CONSTRUCTION LOADS

C13 NO MASONRY OR PARTITION WALLS SHALL BE CONSTRUCTED ON SUSPENDED LEVELS UNTIL 7 DAYS AFTER PROPPING HAS BEEN REMOVED AND THE SLAB PRE-LOADED WITH THE BRICKS OR MATERIALS TO BE USED IN THE WALL.

RESIDENTIAL FOOTINGS AND SLABS

R1 THIS DESIGN HAS BEEN CARRIED OUT IN ACCORDANCE WITH AS2870. CONFIRMATION OF THE SITE CLASSIFICATION IN ACCORDANCE WITH AS2870 IS REQUIRED BY A GEOTECHNICAL ENGINEER PRIOR TO CONSTRUCTION COMMENCING ONSITE AND SHALL INCLUDE CONFIRMATION OF BEARING CAPACITY.

R2 THE OWNERS ATTENTION IS DRAWN TO THE ACCEPTABLE LEVELS OF FOUNDATION PERFORMANCE AS OUTLINED BY AS2870. ACCORDINGLY CATEGORY 1 OR 2 DAMAGE MAY BE EXPECTED UNDER SOME CONDITIONS. SHOULD A HIGHER LEVEL OF CRACK CONTROL BE REQUIRED THEN THE ENGINEER SHOULD BE NOTIFIED SO THAT THIS CAN BE INCORPORATED INTO THE DESIGN.

R3 SITES SHALL BE PREPARED IN ACCORDANCE WITH AS2870. AS A MINIMUM THIS MUST INCLUDE: TOP SOIL CONTAINING GRASS, ROOTS OR ANY OTHER ORGANIC MATERIAL SHALL BE REMOVED FROM THE AREA ON WHICH THE SLAB IS TO REST. BLIND WITH SAND SUFFICIENT ONLY TO ENSURE NO DAMAGE TO DAMP PROOF MEMBRANE (50mm MAX). A VAPOUR BARRIER/DAMP PROOF MEMBRANE SHALL BE PROVIDED. THE MEMBRANE SHALL BE POLYTHENE SHEETING OF MINIMUM THICKNESS 0.2mm. THE SHEET SHALL BE LAID BENEATH THE SLAB SUCH THAT THE SLAB AND ALL BEAMS ARE ENTIRELY UNDERLAID. THE SHEET SHALL EXTEND UNDER EDGE BEAMS TO GROUND LEVEL. SHEET JOINTS SHALL BE FULLY TAPED LAPS WITH A MINIMUM OF 300mm OVERLAP. PENETRATIONS AT PIPES OR FITTINGS, ETC SHALL BE TAPED OR SEALED WITH A CLOSE FITTING SLEEVE OR TURN UP OF THE MEMBRANE.

R4 WHERE ENGINEERED FILL IS REQUIRED, THE FILL SHOULD BE IN STRICT ACCORDANCE WITH GEOTECHNICAL ENGINEERS DESIGN AND ADVICE

R5 WHERE NOTED ON DRAWINGS AS ROLLED FILL, THE FILLING SHALL BE MATERIAL COMPACTED IN LAYERS BY REPEATED ROLLING WITH AN EXCAVATOR OR SIMILAR EQUIPMENT. THE DEPTH OF THE ROLLED FILL SHALL NOT EXCEED: 0.6M FOR SAND FILL COMPACTED IN LAYERS NOT EXCEEDING 300mm & 0.3M FOR NON-SAND FILL COMPACTED IN LAYERS NOT MORE THAN 150mm.

R6 WHERE NOTED ON DRAWINGS AS "FILL AS FORMWORK", FILLING SHALL BE COMPACTED SUFFICIENTLY TO PROVIDE A STABLE PLATFORM DURING CONSTRUCTION. THIS WOULD NORMALLY BE PROVIDED BY COMPACTION TO AT LEAST 85% MAXIMUM STANDARD DRY DENSITY. CONTRACTOR TO ENSURE ALL ADJACENT WALLS REMAIN STABLE DURING COMPACTION.

R7 WHERE HOT WATER PIPES ARE TO BE EMBEDDED IN A SLAB, THE SLAB THICKNESS SHALL BE INCREASED BY 25mm AND THE MESH SIZE INCREASED ONE LEVEL (E.G FROM SL82 TO SL92).

R8 ALLOTMENTS CONTAINING REACTIVE SITES CLASSIFIED AS M, H1, H2 OR E SHALL BE PROVIDED WITH AN ADEQUATE SYSTEM OF DRAINAGE IN ACCORDANCE WITH AS2870 TO ENSURE BEST POSSIBLE FOUNDATION PERFORMANCE. AT A MINIMUM THE FOLLOWING SHOULD BE MAINTAINED: THE SITE SHOULD BE GRADED OR DRAINED SO THAT WATER CANNOT POND AGAINST OR NEAR THE BUILDING. SUBFLOOR AREAS SHOULD BE GRADED TO PREVENT WATER PONDING.

BLOCKWORK:

BL1 ALL WORKMANSHIP AND MATERIALS SHALL BE IN ACCORDANCE WITH A.S. 3700 EXCEPT WHERE VARIED BY THE CONTRACT DOCUMENTS

BL2 BLOCK COMPRESSIVE STRENGTH f'uc SHALL BE 15 MPa min. U.N.O
BLOCK GRADE SHOULD BE CLEARLY INDICATED ON THE DELIVERY DOCKET.

BL3 MORTAR SHALL CONSIST OF 1 PART CEMENT, 1 PART LIME AND 6 PARTS SAND. MORTAR SHALL COMPLY WITH A.S. 3700.

BL4 REINFORCEMENT SHALL BE PLACED AND SECURELY HELD IN THE LOCATIONS INDICATED. RODS SHALL BE TIED TO STARTER BARS IN CLEANOUT BLOCKS. COVER TO VERTICAL REINFORCEMENT SHALL BE 50MM FROM THE OUTSIDE OF THE BLOCK WHERE DRAWN ADJACENT TO BLOCK FACE

BL5 MORTAR PROTRUDING INTO CORE HOLES SHALL BE REMOVED BY THE BLOCK LAYER AFTER EACH COURSE IS LAID. EVERY CORE FILLED WITH GROUT SHALL HAVE A CLEANOUT BLOCK IN THE BOTTOM COURSE

BL6 CORE FILLING GROUT SHALL BE AS SET OUT IN CONCRETE SPECIFICATION TABLE.

BL7 PROVIDE MOVEMENT JOINTS EVERY 6m AND/OR OVER EVERY FLOOR JOINT U.N.O. PROVIDE MOVEMENT JOINTS EVERY 4m IN PARAPET WALLS.

BL8 PROVIDE SMOOTH TROWELED MORTAR BED AND TWO LAYERS OF 'ALCOR' ON TOP OF ALL LOAD BEARING WALLS WHERE SLIP JOINTS ARE NOMINATED.

ENGINEERING INSPECTIONS

48HRs NOTICE MINIMUM IS REQUIRED BEFORE ANY SITE INSPECTION. ANY AREAS NOT INSPECTED BY GREENWOOD CONSULTING ENGINEERS WILL NOT BE CERTIFIED. (PHOTO REVIEW OF ELEMENTS ARE NOT PERMISSIBLE)

E1 BEARING STRATA OF FOUNDATIONS FOR ALL FOOTINGS PRIOR TO CONCRETE POUR TO BE INSPECTED BY GREENWOOD CONSULTING ENGINEERS AND IF SO DEEMED BY A QUALIFIED GEOTECHNICAL ENGINEER.

E2 REINFORCEMENT IN ALL CONCRETE ELEMENTS PRIOR TO CONCRETE POUR.

E3 TIMBER AND STEEL FRAMING PRIOR TO CLADDING AND LINING.

FORMWORK:

FW1. FORMWORK SHALL BE DESIGNED, CONSTRUCTED AND STRIPPED IN ACCORDANCE WITH AS3610.

FW2. THE DESIGN, CONSTRUCTION, CERTIFICATION AND PERFORMANCE OF FORMWORK, FALSEWORK, AND ITS SUPPORT, IS THE RESPONSIBILITY OF THE CONTRACTOR.

FW3. DESIGN INFORMATION CONCERNING THE GROUND SUPPORT OF FORMWORK AND FALSEWORK SHALL BE DETERMINED FROM THE CONDITIONS EXISTING ON SITE AT THE TIME OF CONSTRUCTION.

FW4. THE FORMWORK SHALL BE DESIGNED TO RELY ON NO RESTRAINT OR STABILITY FROM THE PERMANENT STRUCTURE WITHOUT PRIOR APPROVAL FROM THE ENGINEER.

FW5. WHERE APPLICABLE, THE FORMWORK SHALL BE DESIGNED TO ACCOMMODATE MOVEMENT AND LOAD REDISTRIBUTION DUE TO POST-TENSIONING. THE FORMWORK DESIGNER MAY NEED TO CONSULT THE POST-TENSIONING SUBCONTRACTOR TO ACHIEVE THIS.

FW6. SIZES OF CONCRETE ELEMENTS DO NOT INCLUDE APPLIED FINISHES. BEAM DEPTHS ARE WRITTEN FIRST AND INCLUDE THE SLAB THICKNESS. FOR CHAMFERS, DRIP GROOVES, REGLETS ETC. REFER TO THE ARCHITECT'S DRAWINGS AND/OR SPECIFICATION.

FW7. PROVIDE UPWARD CAMBER OF FORMWORK TO SLABS AND BEAMS WHERE NOTED ON THESE DRAWINGS. ALSO APPLY AN UPWARD PRE-SET OF L/120 TO CANTILEVERS WHERE L IS THE SHORTEST PROJECTION FROM THE COLUMN OR WALL FACE. THE FORMWORKER SHALL MAKE THE BUILDER AND CONCRETOR FULLY AWARE OF WHERE FORMWORK IS CAMBERED OR PRE-SET IN ORDER THAT THE FULL DEPTH OF THE MEMBERS IS ACHIEVED DURING CONCRETING.

FW8. FOR HORIZONTAL REINFORCED CONCRETE ELEMENTS, FORMWORK MAY BE STRIPPED WHEN THE CONCRETE HAS REACHED 80% OF ITS SPECIFIED 28 DAY STRENGTH UNLESS STRIPPING TIMES ARE OTHERWISE NOTED ON THE DRAWINGS. ALTERNATIVELY, FORMWORK MAY BE STRIPPED AND PROGRESSIVELY BACK PROPPED AFTER 5 DAYS. THE PROPS SHALL REMAIN IN PLACE UNTIL THE CONCRETE HAS REACHED 80% OF ITS SPECIFIED 28 DAY STRENGTH.

FW9. VERTICAL FORMS TO BEAM SIDES, COLUMNS AND WALLS (UNLOADED) MAY BE STRIPPED AFTER 3 DAYS AND WHEN THE FORMWORKER IS SATISFIED STRIPPING WILL NOT DAMAGE THE GREEN CONCRETE.

FW10. STRIPPING AND BACK PROPPING TO POST-TENSIONED SLABS SHALL BE AS DIRECTED BY THE STRESSING DESIGNER.

FW11. CONSTRUCTION AND SUPPORT PROPPING SHALL BE ADDED, OR LEFT IN PLACE, TO AVOID OVERSTRESSING THE STRUCTURE DUE TO CONSTRUCTION LOADING.

FW12. THE FORMWORKER SHALL PROVIDE CLEANOUTS TO ALL COLUMNS - LEAVE OPEN FOR ENGINEERS INSPECTION, THEN CLOSE OFF IMMEDIATELY PRIOR TO POURING.

FW13. IN MULTI STOREY CONSTRUCTION PROPPING SHALL BE PROVIDED FOR AT LEAST 3 LEVELS BELOW THE FLOOR BEING CAST. PROP REMOVAL SHALL BE PROGRAMMED TO AVOID DISTRESS TO PREVIOUSLY CAST FLOORS. RE-SHORING OR BACK PROPPING IS SUBJECT TO THE APPROVAL OF THE ENGINEER.

FW14. REFER TO THE ARCHITECTS SPECIFICATION FOR THE CLASS SURFACE FINISH TO FORMED SURFACES REQUIRED.

REVISION	AMENDMENT	DATE
A	ISSUE FOR APPROVAL	28/06/2021

Client: TOBY HUTTON

Architect: NA

GREENWOOD CONSULTING ENGINEERS
2/25 Seabeach Avenue, Mona Vale
eliot@greenwoodengineers.com.au ABN - 90 625 916 341

Project: 46 THE AVENUE, NEWPORT RETAINING WALL

Title: NOTE SHEET

Drawn	Designed	Date
BS	EG	28/06/2021
Checked	Approved	Scale
	EG	NTS

Drawing number: 2021182 - 000

Revision: A

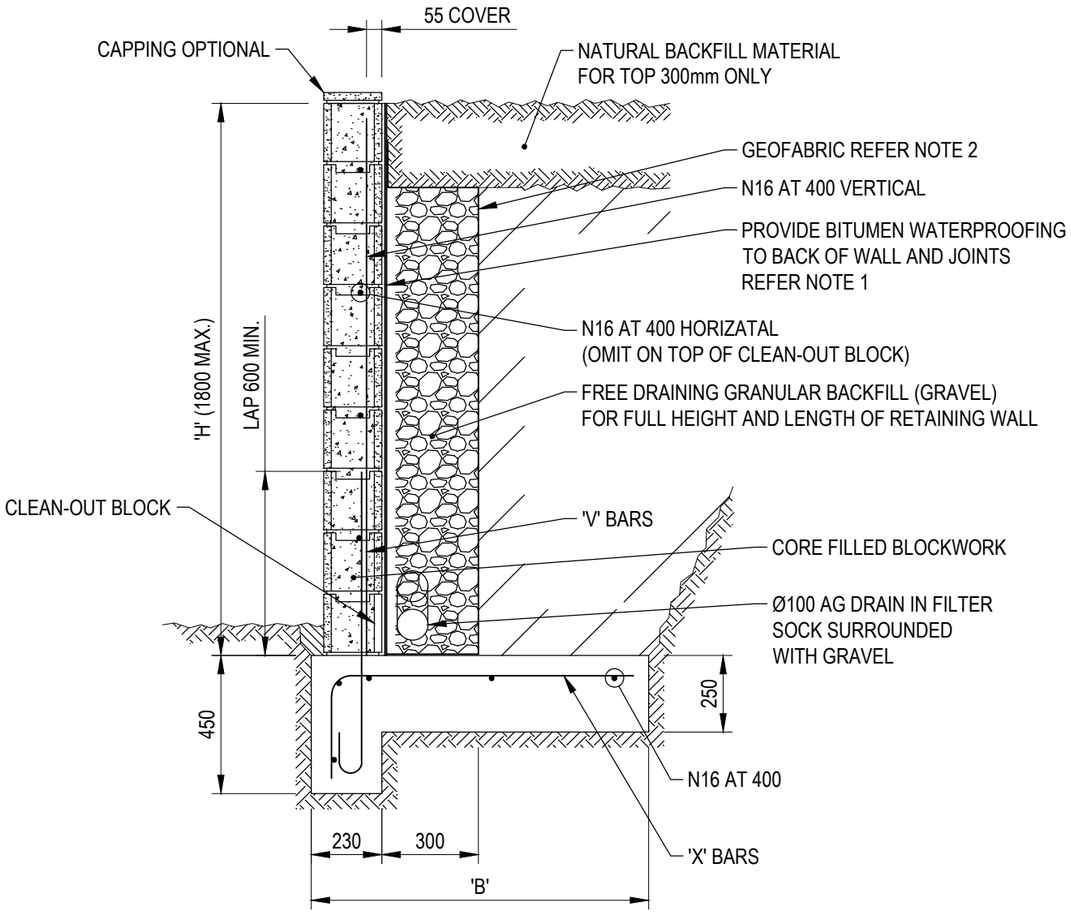

150 OR 200 SERIES BLOCK WALL

SCALE 1:20

NOTE: WITH NO SURCHARGE

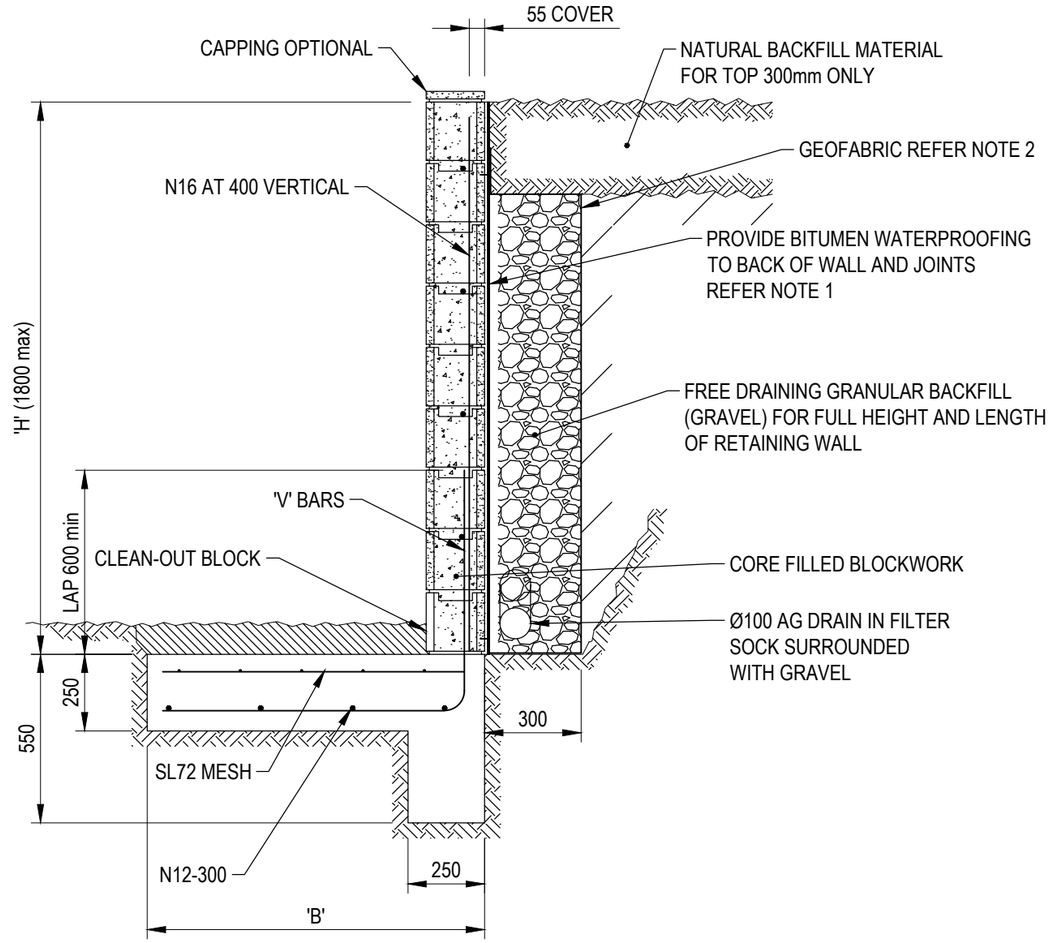

150 OR 200 SERIES BLOCK WALL

SCALE 1:20

RETAINING WALL SCHEDULE TYPE A NS						
TOTAL HEIGHT 'H' (mm)	HEIGHT OF BLOCK TYPE			'B' (mm)	'V' & 'X' BARS	'K' BARS
	150 SERIES	200 SERIES	300 SERIES			
800	800	-	-	600	N12 AT400	-
1000	1000	-	-	700	N12 AT400	-
1200	1200	-	-	800	N12 AT400	-
1400	-	1400	-	900	N16 AT400	-
1600	-	1600	-	1000	N16 AT400	-
1800	-	1800	-	1100	N16 AT400	-

NOTES:

1. ENSURE REAR FACE OF RETAINING WALL IS FULLYENSURE REAR FACE OF RETAINING WALL IS FULLY WATERPROOFED. USE EMER-PROOF ECOFLEX OR APPROVED EQUIVALENT IN ACCORDANCE WITH MANUFACTURERS SPECIFICATION. EG: 2 COATS MIN. APPLIED IN OPPOSITE DIRECTIONS AND ALLOWED TO CURE FOR 7 DAYS.
2. PROVIDE GEOFABRIC MATERIAL AS SEPERATION BETWEEN GRANULAR BACKFILL (GRAVEL) AND NATURAL BACKFILL MATERIAL. USE BIDIM A24 OR APPROVED EQUIVALENT.

REVISION	AMENDMENT	DATE
A	ISSUE FOR APPROVAL	28/06/2021

Client: TOBY HUTTON

Architect: NA

GREENWOOD CONSULTING ENGINEERS
2/25 Seabeach Avenue, Mona Vale
eliot@greenwoodengineers.com.au ABN - 90 625 916 341

Project: 46 THE AVENUE, NEWPORT RETAINING WALL

Title: RETAINING WALL DETAIL

Drawn	Designed	Date
BS	EG	28/06/2021
Checked	Approved	Scale
	EG	1:20

Drawing number: 2021182 - 001

Revision: A

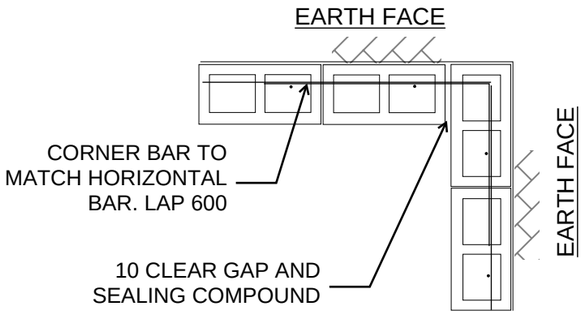

TYPICAL CORNER DETAIL
SCALE 1:10

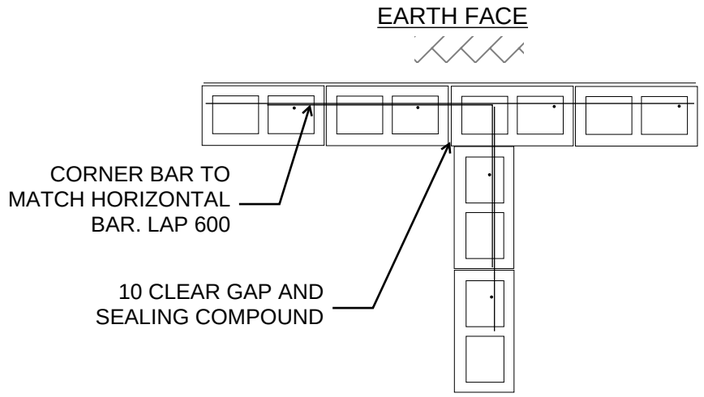

TYPICAL T SECTION DETAIL
SCALE 1:10

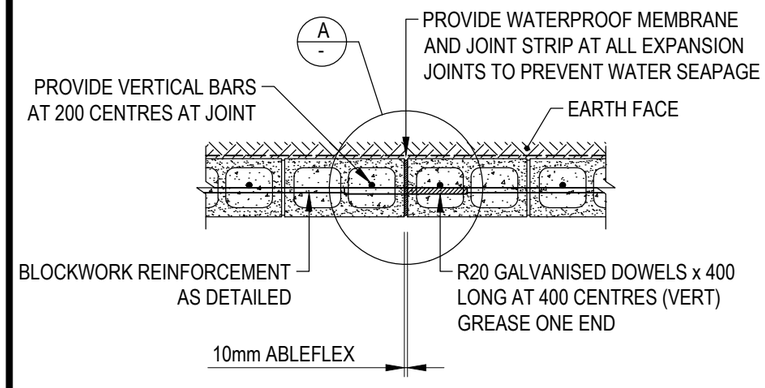

EXTERNAL WALL PLAN
SCALE 1:20

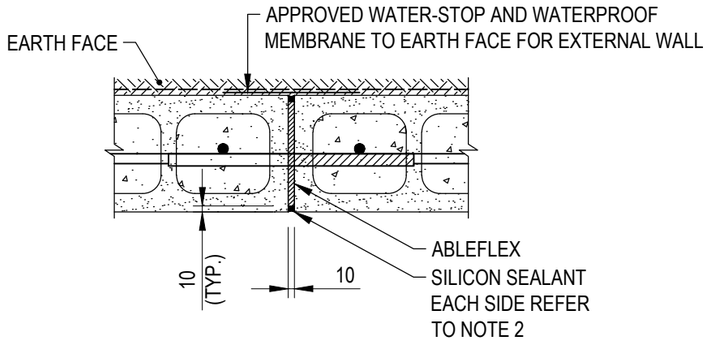

DETAIL A -
SCALE 1:20

TYPICAL EXPANSION JOINT DETAILS
SCALE 1:20

NOTES:

1. UNLESS OTHERWISE NOTED ON PLAN JOINTS SHALL BE LOCATED AT 8000 CENTRES MAX. AND 4000 FROM CORNERS.
2. PROVIDE SILICON SEALANT BOTH FACES IN ALL JOINTS, USE PARCHEM EMER-SEAL CR OR AN APPROVED EQUIVALENT.

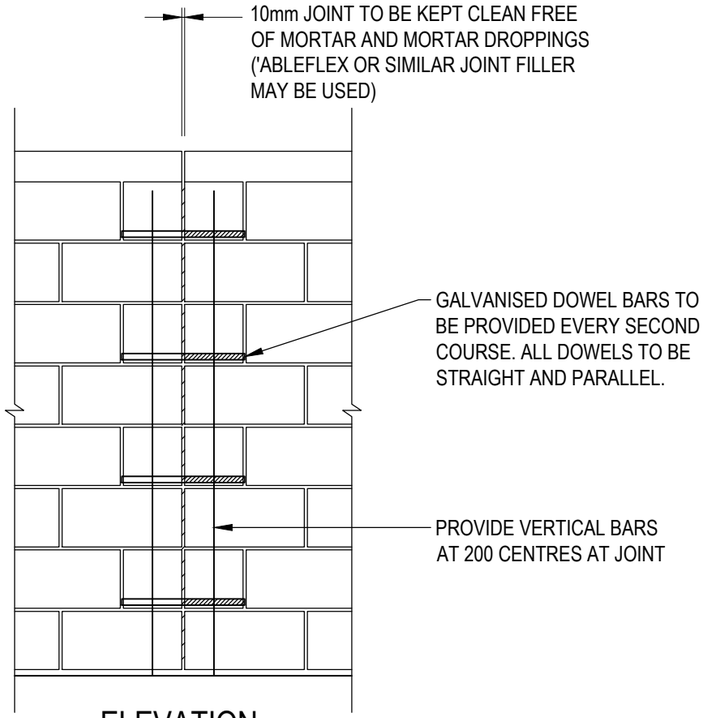

ELEVATION
SCALE 1:20

TYPICAL BLOCKWORK VERTICAL EXPANSION JOINT
SCALE 1:20

REVISION	AMENDMENT	DATE
A	ISSUE FOR APPROVAL	28/06/2021

Client: TOBY HUTTON

Architect: NA

GREENWOOD CONSULTING ENGINEERS
2/25 Seabeach Avenue, Mona Vale
eliot@greenwoodengineers.com.au ABN - 90 625 916 341

Project: 46 THE AVENUE, NEWPORT RETAINING WALL

Title: BLOCK DETAILS

Drawn	Designed	Date
BS	EG	28/06/2021
Checked	Approved	Scale
	EG	NTS

Drawing number: 2021182 - 002

Revision: A