GENERAL NOTES

1. THE PLUMBER/ DRAINER SHALL INSPECT THE SITE AND CONFIRM THE EXISTING SITE STRUCTURES, SERVICES AND CONDITIONS PRIOR TO PROCEEDING. IF ANY DISCREPANCIES FOUND, CONTACT THE ENGINEER FOR DISCUSSION.

2. ALL WORKS TO BE CARRIED OUT IN ACCORDANCE WITH RELEVANT AUSTRALIAN STANDARDS, BUILDING CODE OF AUSTRALIA AND LOCAL GOVERNMENT'S REQUIREMENTS. IT IS THE RESPONSIBILITY OF THE PLUMBER/ DRAINER TO OBTAIN ANY APPROVALS/ PERMITS/ LICENSES ISSUED BY THE AUTHORITIES PRIOR TO PROCEEDING WITH STORMWATER WORKS.

3. UNLESS NOTED AS OTHERWISE, ALL DOWNPIPES TO BE Ø100 ROUND (OR 100x75 RECTANGULAR) AND FULLY SEALED; ALL STORMWATER PIPES TO BE Ø100 SEWER GRADE AND LAID AT 1% MIN. FALL. ALL MATERIALS USED IN THE WORK SHALL BE NEW AND CONFORM WITH RELEVANT AUSTRALIAN STANDARDS AND BEAR THE REQUIRED STANDARDS MARK.

4. LOCATION OF STORMWATER SYSTEMS, INCLUDING DOWNPIPES, PIPES, PITS AND RAINWATER TANK ARE INDICATIVE ONLY. EXACT LOCATION SHALL BE DETERMINED ON SITE TO SUIT SITE CONDITIONS.

5. SUB-SOIL DRAINS FOR RETAINING WALL SHALL BE INSTALLED BY THE BUILDER AND CONNECTED TO STORMWATER LINES. ALL AGG. LINES SHALL BE 100mm DIA., UNLESS NOTED OTHERWISE.

6. LEVELS ARE APPROXIMATE ONLY. THE PLUMBER/ DRAINER SHALL CONFIRM THE LEVELS PRIOR TO PROCEEDING. IF ANY DISCREPANCIES FOUND, CONTACT THE ENGINEER FOR DISCUSSION.

7. INSPECTION AND CERTIFICATION, IF REQUIRED, SHALL BE DONE PRIOR TO BACKFILLING. ALLOW 24 HOUR NOTICE FOR THE ENGINEER TO CARRY OUT INSPECTION.

8. ANY DAMAGE TO SERVICES DURING CONSTRUCTION SHALL BE REPAIRED IMMEDIATELY AT THE PLUMBER/ DRAINER'S OWN EXPENSE.

9. THESE DRAWINGS ARE TO BE READ IN CONJUNCTION WITH:
- ARCHITECTURAL PLAN BY ..., PROJECT/JOB No. ..., REVISION/ISSUE No. ..., DATED ...

BASIX REQUIREMENTS

THIS DEVELOPMENT IS AN ALTERATIONS AND ADDITIONS TO AN EXISTING SINGLE DWELLING ONLY. THERE IS NO COMMITMENT TO RAINWATER REUSE UNDER BASIX CERTIFICATE.

OSD REQUIREMENTS

THIS DEVELOPMENT IS AN ALTERATIONS AND ADDITIONS TO AN EXISTING SINGLE DWELLING ONLY. DUE TO THAT THE TOTAL IMPERVIOUS AREA NOT BEING INCREASED, OSD IS NOT REQUIRED.

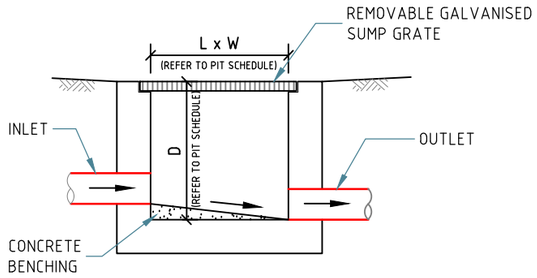

GRATED PIT DETAILS

SCALE 1:20

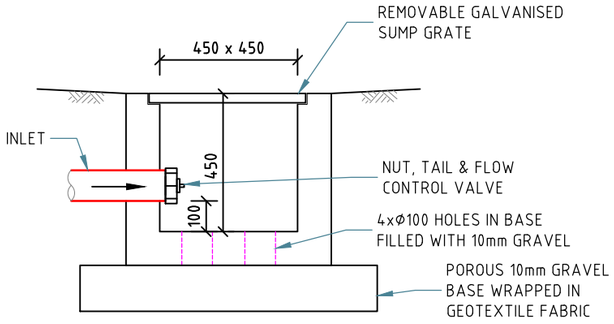

CLEAN-OUT/FIRST FLUSH PIT DETAILS

SCALE 1:20

MINIMUM PIPE COVER
(FROM FINISHED SURFACE TO TOP OF PIPE)

LOCATION	MINIMUM COVER (mm)	
	CAST/DUCTILE IRON GAL STEEL	OTHER AUTHORISED PRODUCTS (~)
1. NOT SUBJECT TO VEHICULAR LOADING:		
A. WITHOUT PAVEMENT		
i. FOR SINGLE DWELLING	0	100
ii. OTHER THAN SINGLE DWELLING	0	300
B. WITH PAVEMENT OF BRICK/UNREINFORCED CONCRETE	0(~~)	50(~~)
2. SUBJECT TO VEHICULAR LOADING:		
A. OTHER THAN ROAD:		
i. WITHOUT PAVEMENT	300	450
ii. WITH PAVEMENT OF:		
- REIFORCED CONC. FOR HEAVY VEHICLE	0(~~#)	100(~~#)
- BRICK/UNREINF. CONC. LIGHT VEHICLE	0(~~#)	75(~~#)
B. ROAD		
i. SEALED	300	500(#)
ii. UNSEALED	300	500(#)
3. SUBJECT TO CONSTRUCTION VEHICLE OR IN ENBANKMENT CONDITION	300	500(#)

(~) INCLUDES OVERLAY ABOVE THE TOP OF THE PIPE OF NOT LESS THAN 50mm THICK
(~~) BELOW THE UNDERSIDE OF THE PAVEMENT
(#) SUBJECT TO COMPLIANCE WITH AS1762, AS2033, AS/NZS2566.1, AS3725 OR AS4060

www.dialbeforeyoudig.com.au
DIAL1100 BEFORE YOU DIG

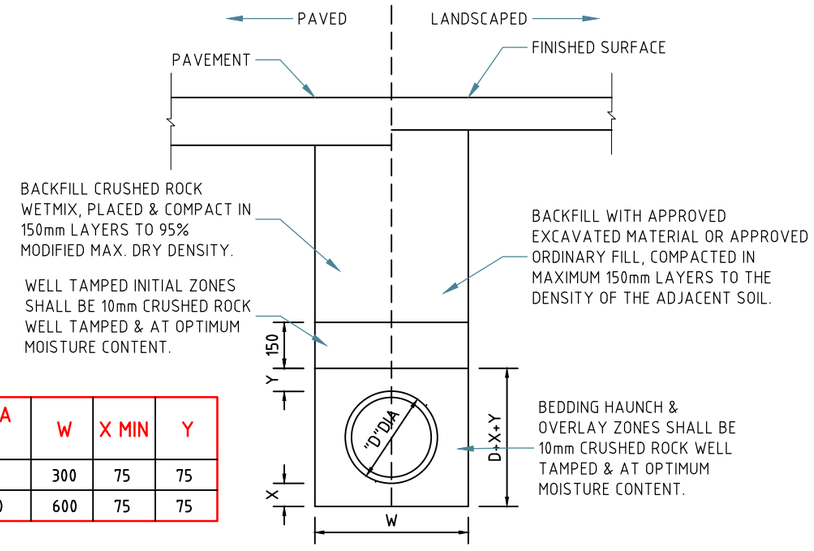

PIPE DIA "D"	W	X MIN	Y
100-150	300	75	75
225-300	600	75	75

UPVC PIPE TRENCH BACKFILL TYP. DETAILS

SCALE 1:20

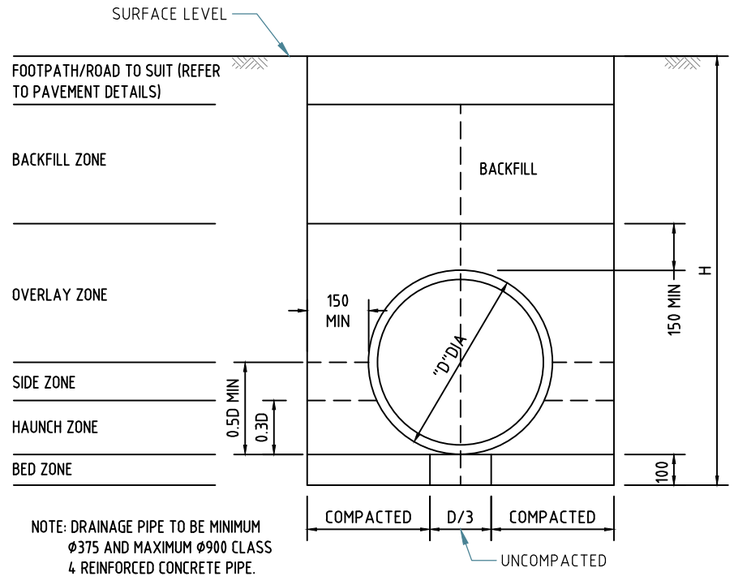

CONCRETE PIPE TRENCH BACKFILL TYP. DETAILS

SCALE 1:20

Paper size: A3

All dimensions are in millimetres. Do not scale the drawing. Use written dimensions. Dimensions must be confirmed prior to commencement. Location of services are approximate only. Dial 1100 before any excavation or demolition.

Revisions	
Original issue	
Designed: DL,HL	Checked: HL

Approved:

Quoc Huy Nguyen
PhD (Eng), MIEAust, CPEng, NER Reg. No. 208 2513

NITMA CONSULTING PTY LTD
PO Box 43, West Ryde NSW 1685
M: 0434 284 585
E: admin@nitma.com.au
W: nitma.com.au
© Copyright. All rights reserved.

PROJECT: PROPOSED ALTERATIONS AND ADDITIONS
ADDRESS: 7 CARLTON STREET, MANLY
LGA: NORTHERN BEACHES COUNCIL

NOTES & STANDARD DETAILS

Project No: 3484H Issue: B Date: 17.01.2019 Sheet No: 1 of 3

www.dialbeforeyoudig.com.au

DIAL1100 BEFORE YOU DIG

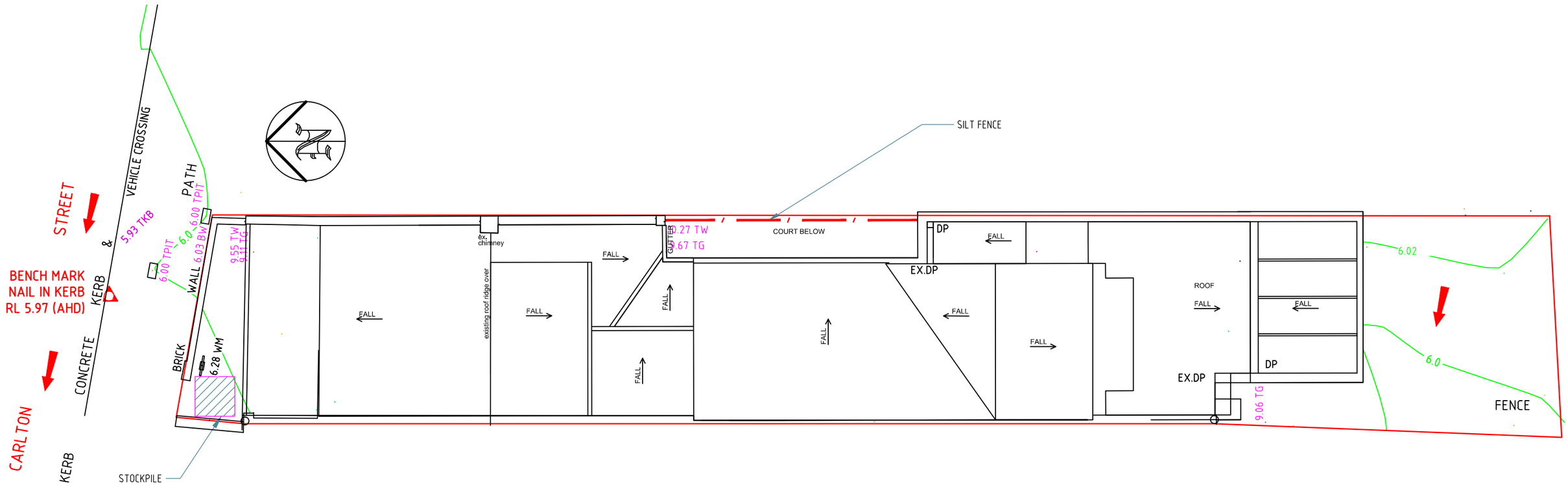

EROSION AND SEDIMENT PLAN.

SCALE 1:100

NOTES:

1. ALL EROSION AND SEDIMENT CONTROL MEASURES TO BE INSPECTED AND MAINTAINED DAILY BY SITE MANAGER
2. MINIMISE DISTURBED AREA
3. ALL STOCKPILES TO BE CLEAR FROM DRAINS, GUTTERS AND FOOTPATH
4. DRAINAGE IS TO BE CONNECTED TO STORMWATER SYSTEM AS SOON AS POSSIBLE
5. ROADS AND FOOTPATH TO BE SWEPT DAILY
6. KERB SIDE INLET TO BE PROTECTED WITH FABRIC FILLED WITH GRAVEL

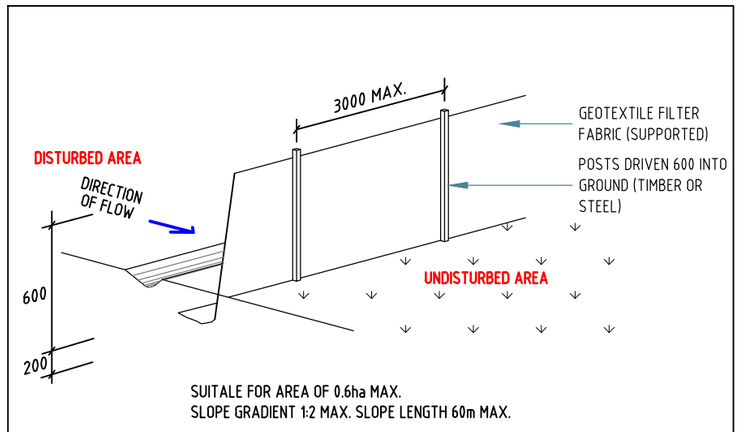

SEDIMENT FENCE DETAILS

Paper size: A3	All dimensions are in millimetres. Do not scale the drawing. Use written dimensions. Dimensions must be confirmed prior to commencement. Location of services are approximate only. Dial 1100 before any excavation or demolition.	Revisions: Original issue	Approved: Quoc Huy Nguyen, PhD (Eng), MIEAust, CPEng, NER Reg. No. 208 2513	NITMA CONSULTING PTY LTD, PO Box 43, West Ryde NSW 1685, M: 0434 284 585, E: admin@nitma.com.au, W: nitma.com.au, © Copyright. All rights reserved.
		Designed: DL,HL / Checked: HL		

PROJECT: PROPOSED ALTERATIONS AND ADDITIONS
ADDRESS: 7 CARLTON STREET, MANLY
LGA: NORTHERN BEACHES COUNCIL

EROSION & SEDIMENT CONTROL PLAN

Project No: 3484H Issue: B Date: 17.01.2019 Sheet No: 2 of 3

www.dialbeforeyoudig.com.au

DIAL1100 BEFORE YOU DIG

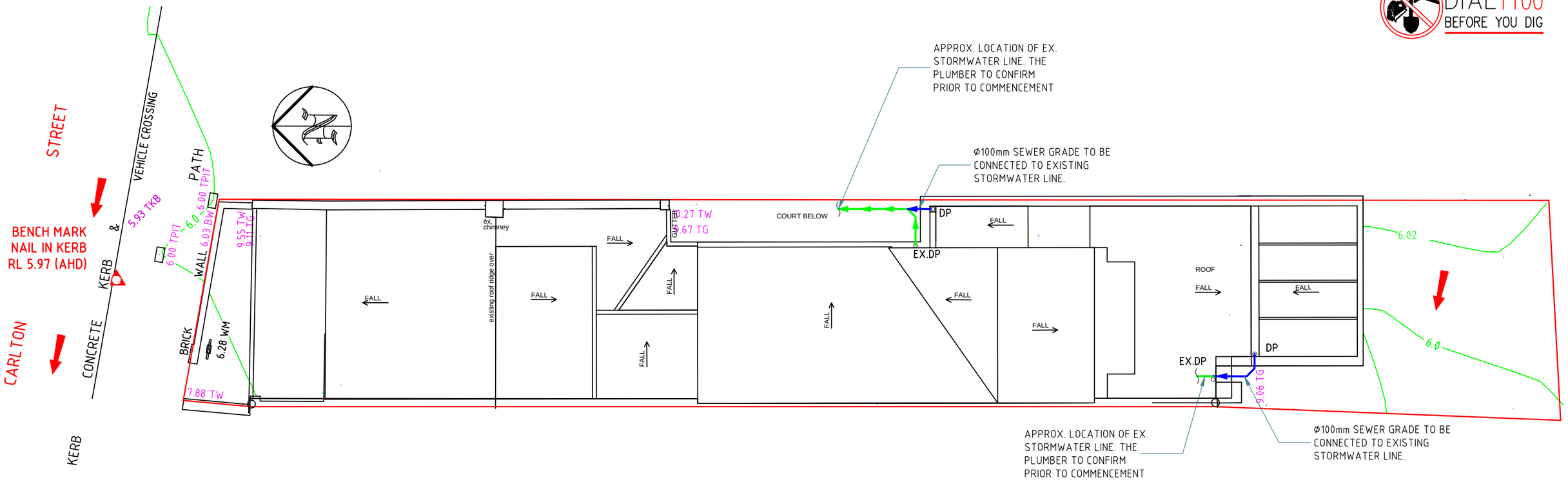

DRAINAGE PLAN.

SCALE 1:100

LEGEND:

DP	DOWNPIPE
@FW#	FLOOR WASTE No. # ON LEVEL @
GP	GRATED PIT
SP	SILT ARRESTOR PIT
CP	CLEAN-OUT PIT
SL	SURFACE LEVEL
IL	INVERT LEVEL
KO	KERB OUTLET
	225x100 GRATED BOX DRAIN
	ROOF- WATER PIPELINE
	SURFACE- WATER PIPELINE
	SURFACE RUNOFF DIRECTION
> > >	EARTH-MOUND SWALE OR DISH DRAIN
20.00	EXISTING GROUND CONTOUR
+20.00	PROPOSED GROUND LEVEL
	100 DIA. YARD SUMP OR 250 SQ. GRATED PIT

Paper size: A3

All dimensions are in millimetres. Do not scale the drawing. Use written dimensions. Dimensions must be confirmed prior to commencement. Location of services are approximate only. Dial 1100 before any excavation or demolition.

Revisions

Original issue

Designed: DL,HL | Checked: HL

Approved:

Quoc Huy Nguyen
PhD (Eng), MIEAust, CPEng,
NER Reg. No. 208 2513

NITMA CONSULTING PTY LTD
PO Box 43, West Ryde NSW 1685
M: 0434 284 585
E: admin@nitma.com.au
W: nitma.com.au
© Copyright. All rights reserved.

PROJECT: PROPOSED ALTERATIONS AND ADDITIONS
ADDRESS: 7 CARLTON STREET, MANLY
LGA: NORTHERN BEACHES COUNCIL

DRAINAGE PLAN

Project No: 3484H | Issue: B | Date: 17.01.2019 | Sheet No: 3 of 3