ANZ MANLY

# SIGNAGE PACK

| | |
|---|---|
| **STAGE** | Visual Pack |
| **VERSION** | Revision A |
| **DATE** | 02/07/21 |

opalescent

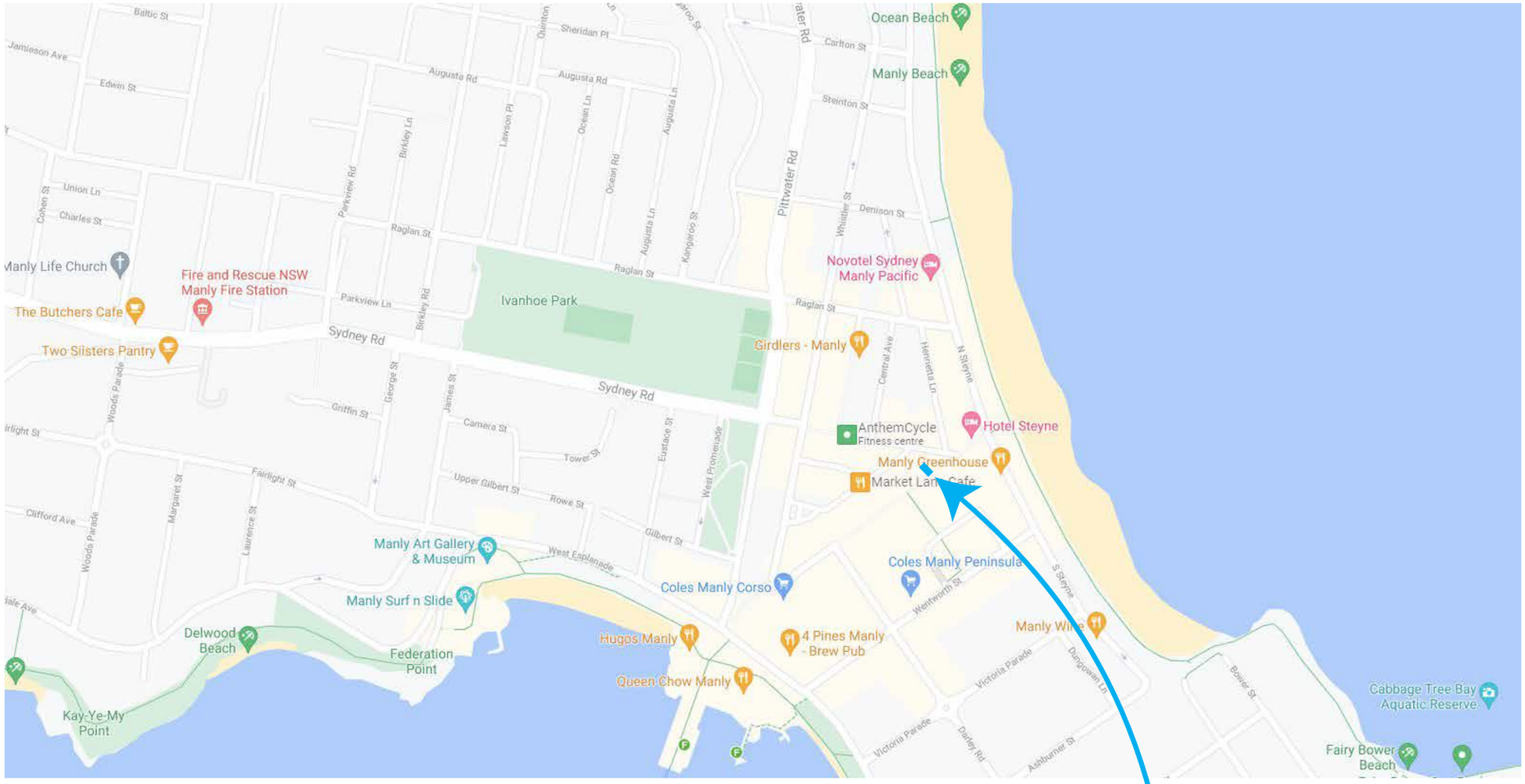

# ANZ MANLY

59 The Corso, Manly, NSW 2095

| | |
|---|---|
| **ITEM** | SITE LOCATION |
| **QUANTITY** | N/A |

This design/artwork is the property of Opalescent Group and is subject to recall. Reproduction in any material form is reserved under copyright law.

All dimensions in millimetres unless noted. Use figured dimensions in preference to scaling. Due to variations in printers and monitors the colours in this drawing are not an accurate representation of the final product.

Opalescent uses high-quality, HP eco-friendly printing technology - certified for low chemical emissions and indoor air quality.

| REV | AMENDMENT | DATE | REV | AMENDMENT | DATE |
|---|---|---|---|---|---|
| A | PRELIMINARY | 02/07/21 | | | |

| | | |
|---|---|---|
| CLIENT | ANZ | JOB# 19752 |
| PROJECT | MANLY | |
| DRAWING | 01 | |
| CONTACT | ---- | |
| ADDRESS | 59 The Corso, Manly, NSW 2095 | |
| DRAWN BY | BS | |

**opalescent**

| | |
|---|---|
| **ITEM** | EXISTING CONDITIONS |
| **QUANTITY** | N/A |

This design/artwork is the property of Opalescent Group and is subject to recall. Reproduction in any material form is reserved under copyright law.

All dimensions in millimetres unless noted. Use figured dimensions in preference to scaling. Due to variations in printers and monitors the colours in this drawing are not an accurate representation of the final product.

Opalescent uses high-quality, HP eco-friendly printing technology - certified for low chemical emissions and indoor air quality.

| REV | AMENDMENT | DATE | REV | AMENDMENT | DATE |
|---|---|---|---|---|---|
| A | PRELIMINARY | 02/07/21 | | | |

| | | |
|---|---|---|
| CLIENT | ANZ | JOB# 19752 |
| PROJECT | MANLY | |
| DRAWING | 01 | |
| CONTACT | ---- | |
| ADDRESS | 59 The Corso, Manly, NSW 2095 | |
| DRAWN BY | BS | |

**opalescent**

| | |
|---|---|
| **ITEM** | SITE PLAN |
| **QUANTITY** | N/A |

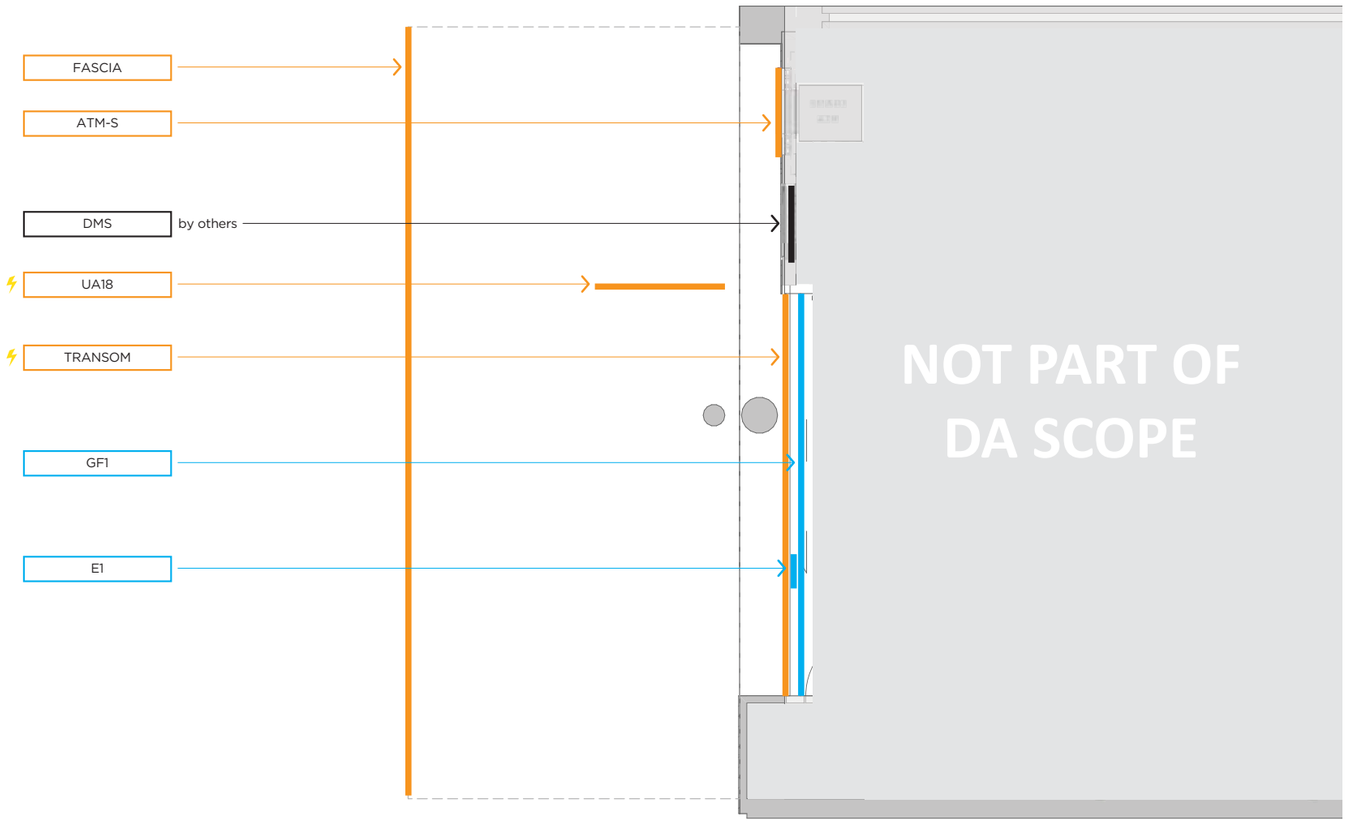


ANZ MANLY - SITE PLAN
SCALE NTS

| | CODE | DESCRIPTION | INSTRUCTIONS | ⚡ M² | M² | ADDRESS |
|---|---|---|---|---|---|---|
| SIGNAGE | UA-18 | Under Awning Sign 1800mmW (illuminated) | NEW fabricated illuminated Under Awning Sign (fixing to awning TBC). | 0.08 | 0.65 | **ANZ MANLY**<br>59 THE CORSO,<br>MANLY, NSW 2095 |
| | TRANSOM | Transom (illuminated brand) | NEW transom to be applied to external structure (support and fixing method TBC). | 0.13 | 2.8 | |
| | FASCIA | Fascia (non-illuminated brand) | NEW fascia to be applied to external awning structure (support and fixing method TBC). | n/a | 6.16 | |
| | ATM SURROUND | Smart ATM surroudn (non-illuminated) | NEW ATM Surround to be fixed to existing substrate | n/a | 1.9 | |
| GENERAL WORKS | E1 | Branch Trading Hours | Print applied to inside of glazing. | | | |
| | GF1 | Safety Strip | Digital print of continuous brand applied to rear of window glazing. | | | |
| | DIGITAL SCREEN | 75" Digital Media Screen | Work to be completed by others | | | |

This design/artwork is the property of Opalescent Group and is subject to recall. Reproduction in any material form is reserved under copyright law.

All dimensions in millimetres unless noted. Use figured dimensions in preference to scaling. Due to variations in printers and monitors the colours in this drawing are not an accurate representation of the final product.

Opalescent uses high-quality, HP eco-friendly printing technology - certified for low chemical emissions and indoor air quality.

| REV | AMENDMENT | DATE | REV | AMENDMENT | DATE |
|---|---|---|---|---|---|
| A | PRELIMINARY | 02/07/21 | | | |

| | | |
|---|---|---|
| CLIENT | ANZ | JOB# 19752 |
| PROJECT | MANLY | |
| DRAWING | 01 | |
| CONTACT | ---- | |
| ADDRESS | 59 The Corso, Manly, NSW 2095 | |
| DRAWN BY | BS | |

**opalescent**

| | |
|---|---|
| **ITEM** | EXTERNAL ELEVATIONS |
| **QUANTITY** | N/A |

EXTERNAL ELEVATION - SHOPFRONT
SCALE 1:50

This design/artwork is the property of Opalescent Group and is subject to recall. Reproduction in any material form is reserved under copyright law.

All dimensions in millimetres unless noted. Use figured dimensions in preference to scaling. Due to variations in printers and monitors the colours in this drawing are not an accurate representation of the final product.

Opalescent uses high-quality, HP eco-friendly printing technology - certified for low chemical emissions and indoor air quality.

| REV | AMENDMENT | DATE | REV | AMENDMENT | DATE |
|---|---|---|---|---|---|
| A | PRELIMINARY | 02/07/21 | | | |

| | | |
|---|---|---|
| CLIENT | ANZ | JOB# 19752 |
| PROJECT | MANLY | |
| DRAWING | 01 | |
| CONTACT | ---- | |
| ADDRESS | 59 The Corso, Manly, NSW 2095 | |
| DRAWN BY | BS | |

**opalescent**

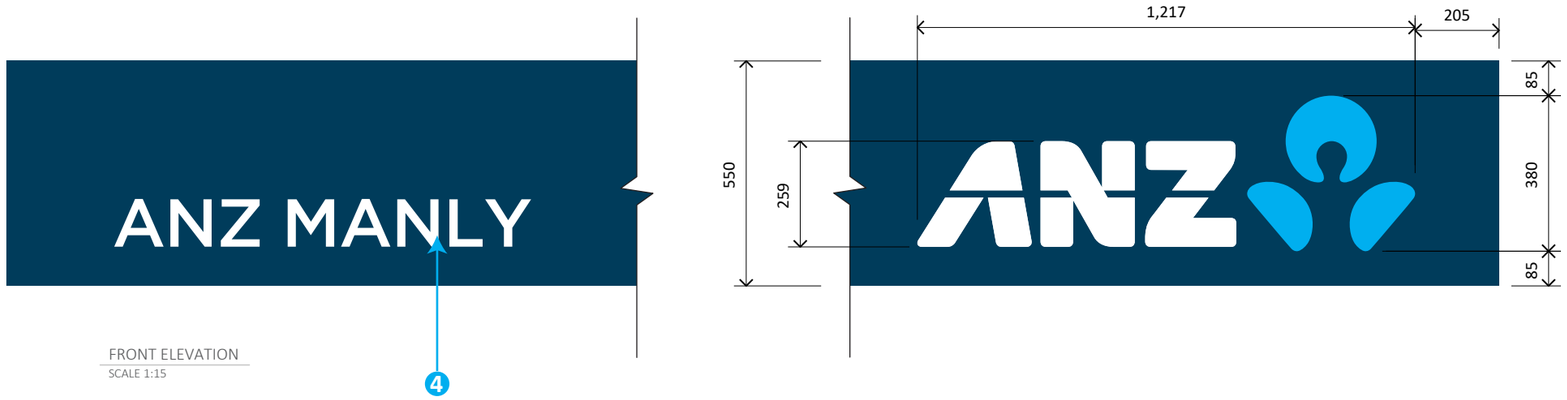


FRONT ELEVATION
SCALE 1:15

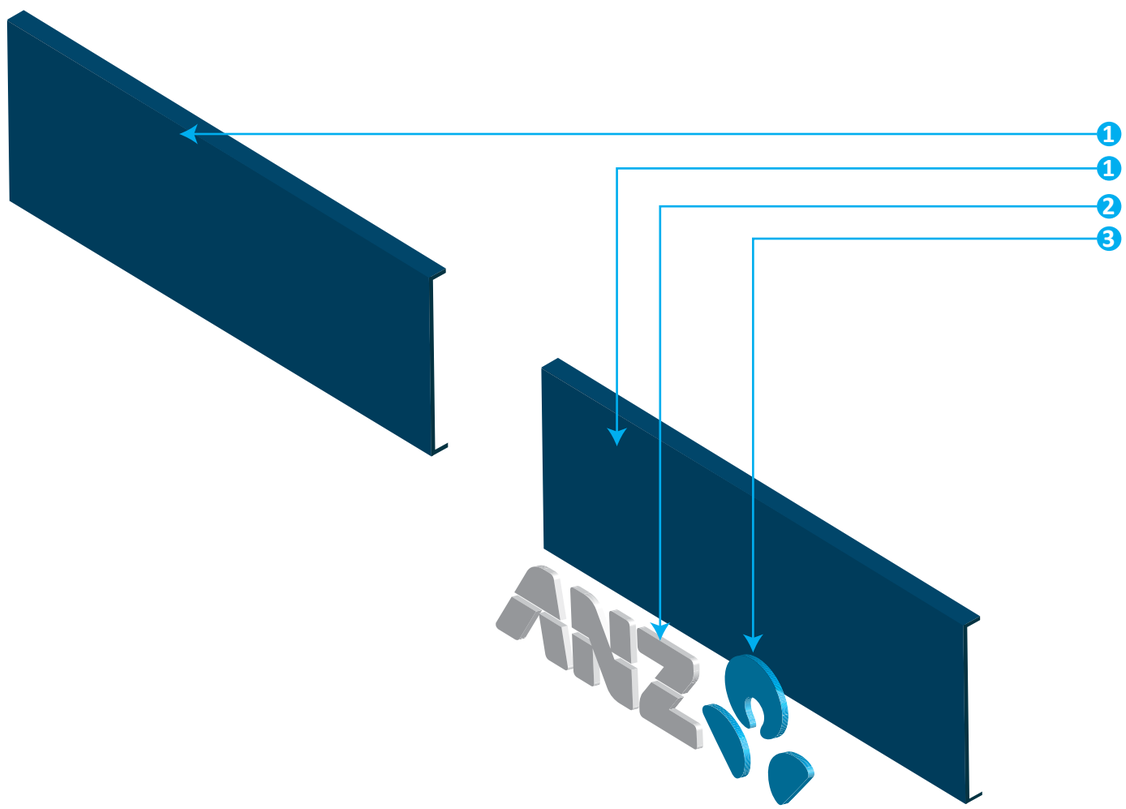


EXPLODED VIEW

| | |
|---|---|
| **ITEM** | FASCIA |
| **QUANTITY** | - |

COLOURS

| PANTONE 302C Matte finish | 2 PACK PAINT Glacier White Matte | 2 PACK PAINT ANZ Ocean Blue Matte |
|---|---|---|

**DESCRIPTION**

1. Deep current cladding panel from 3mm aluminium router cut and folded. Panel to match Pantone 302C matte finish. CSK mechanical fixing back to existing substrate.
2. 3mm profile cut flat aluminium panel adhered direct back to deep current cladding panels. 2 pac painted Matte Glacier White.
3. 3mm profile cut lotus flat aluminium panel adhered direct back to deep current cladding panels. 2 pac painted Matte ANZ Ocean Blue.
4. 3mm profile cut flat aluminium panel adhered direct back to deep current cladding panels. 2 pac painted Matte Glacier White.

This design/artwork is the property of Opalescent Group and is subject to recall. Reproduction in any material form is reserved under copyright law.

All dimensions in millimetres unless noted. Use figured dimensions in preference to scaling. Due to variations in printers and monitors the colours in this drawing are not an accurate representation of the final product.

Opalescent uses high-quality, HP eco-friendly printing technology - certified for low chemical emissions and indoor air quality.

| REV | AMENDMENT | DATE | REV | AMENDMENT | DATE |
|---|---|---|---|---|---|
| A | PRELIMINARY | 02/07/21 | | | |

| | | |
|---|---|---|
| CLIENT | ANZ | JOB# 19752 |
| PROJECT | MANLY | |
| DRAWING | 01 | |
| CONTACT | ---- | |
| ADDRESS | 59 The Corso, Manly, NSW 2095 | |
| DRAWN BY | BS | |

**opalescent**

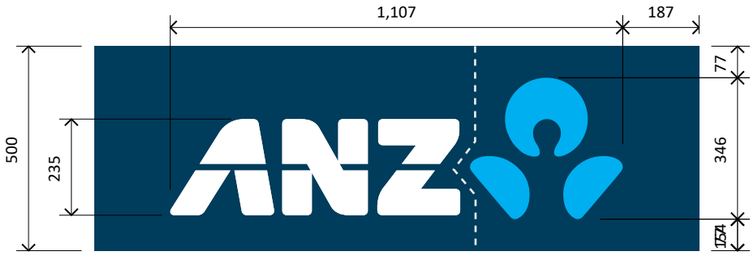


FRONT ELEVATION
SCALE 1:15

RHS ELEVATION
SCALE 1:15

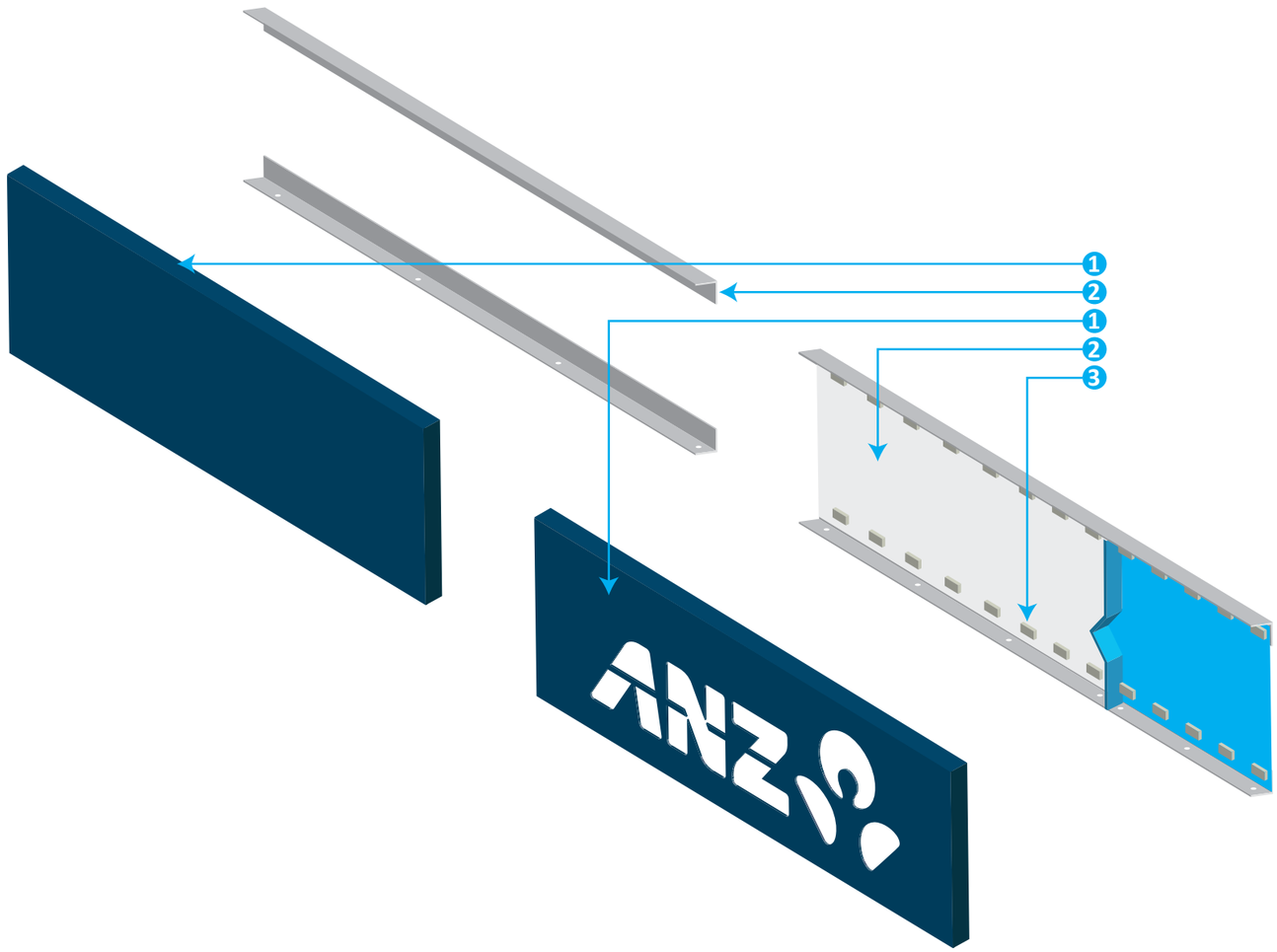


EXPLODED VIEW

| | |
|---|---|
| **ITEM** | TRANSOM |
| **QUANTITY** | - |

COLOURS

| PANTONE 302C Matte finish | 2 PACK PAINT Glacier White Matte | 2 PACK PAINT ANZ Ocean Blue Matte |
|---|---|---|

**DESCRIPTION**

1. Deep current cladding panel from 3mm aluminium router cut and folded with 50mm returns. Logo to be profile cut from brand panel. Panel to match Pantone 302C matte finish.

2. Light tray to be 3mm flat aluminium panel adhered to 40x3mm aluminium angles. 3mm aluminium middle section barrier. Internal surfaces to have Avery white 700 and Arlon Ocean Blue 31 applied. Foam tape on edges to prevent light leaks.

3. Sloan prism 24 LEDs. To be mounted on flat light tray panel along top and bottom edge. Illumination to be tested and may require changing to poster box mini leds.

   Note: Water egress holes required through both aluminium front cladding panel and aluminium mounting angles along bottom return.

This design/artwork is the property of Opalescent Group and is subject to recall. Reproduction in any material form is reserved under copyright law.

All dimensions in millimetres unless noted. Use figured dimensions in preference to scaling. Due to variations in printers and monitors the colours in this drawing are not an accurate representation of the final product.

Opalescent uses high-quality, HP eco-friendly printing technology - certified for low chemical emissions and indoor air quality.

| REV | AMENDMENT | DATE | REV | AMENDMENT | DATE |
|---|---|---|---|---|---|
| A | PRELIMINARY | 02/07/21 | | | |

| | | |
|---|---|---|
| CLIENT | ANZ | JOB# 19752 |
| PROJECT | MANLY | |
| DRAWING | 01 | |
| CONTACT | ---- | |
| ADDRESS | 59 The Corso, Manly, NSW 2095 | |
| DRAWN BY | BS | |

**opalescent**

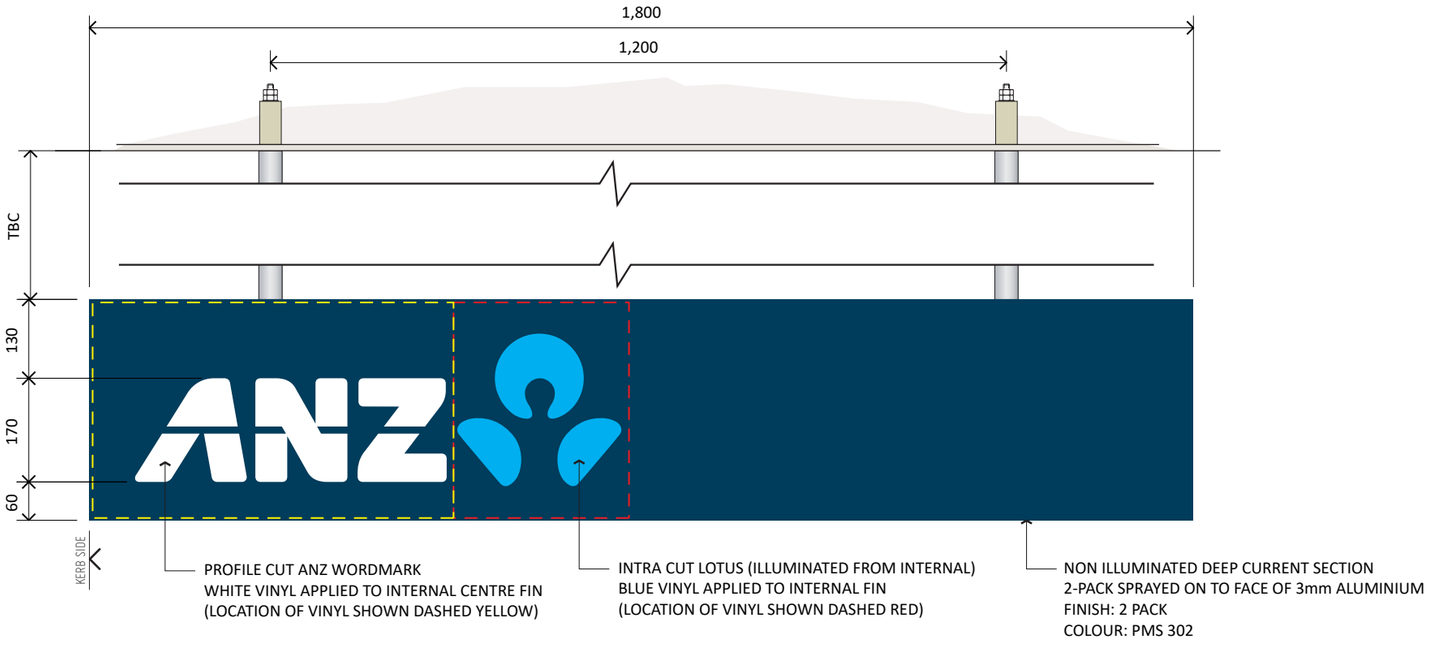


REAR ELEVATION
(Scale 1:10)

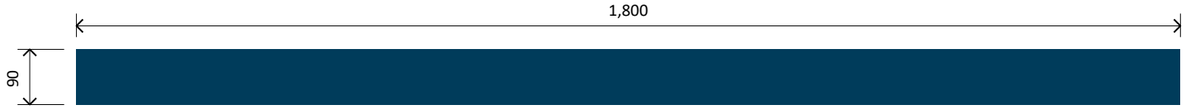


PLAN
(Scale 1:10)

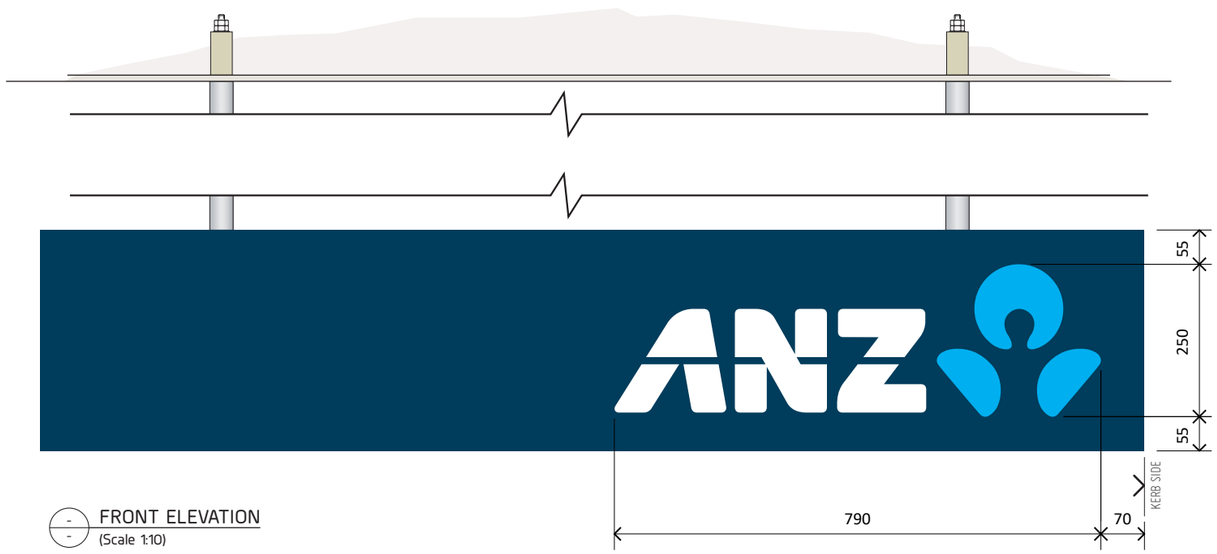


FRONT ELEVATION
(Scale 1:10)

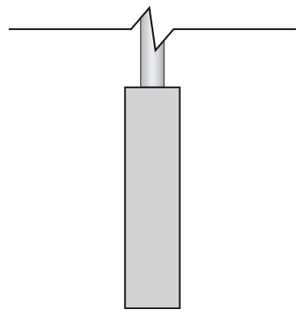

KERB SIDE
(Scale 1:10)

| | |
|---|---|
| **ITEM** | UNDER AWNING SIGN |
| **QUANTITY** | - |

COLOURS

| PANTONE 302C Matte finish | 2 PACK PAINT Glacier White Matte | 2 PACK PAINT ANZ Ocean Blue Matte |
|---|---|---|

**DESCRIPTION**

1. 3mm aluminium with intracut logo. 2 pack painted to match Pantone 302C matte finish.
2. Internal illumination on to central 3mm aluminium panel. Panel to be painted in locations shown dashed yellow and red for logo graphics.
3. Sign to be suspended off all thread rod that is concealed within CHS aluminium tube and fixed internally.

This design/artwork is the property of Opalescent Group and is subject to recall. Reproduction in any material form is reserved under copyright law.

All dimensions in millimetres unless noted. Use figured dimensions in preference to scaling. Due to variations in printers and monitors the colours in this drawing are not an accurate representation of the final product.

Opalescent uses high-quality, HP eco-friendly printing technology - certified for low chemical emissions and indoor air quality.

| REV | AMENDMENT | DATE | REV | AMENDMENT | DATE |
|---|---|---|---|---|---|
| A | PRELIMINARY | 02/07/21 | | | |

| | | |
|---|---|---|
| CLIENT | ANZ | JOB# 19752 |
| PROJECT | MANLY | |
| DRAWING | 01 | |
| CONTACT | ---- | |
| ADDRESS | 59 The Corso, Manly, NSW 2095 | |
| DRAWN BY | BS | |

**opalescent**

FRONT ELEVATION
SCALE 1:15

RHS VIEW
SCALE 1:15

| | |
|---|---|
| **ITEM** | ATM-SE |
| **QUANTITY** | - |

COLOURS

| PANTONE 302C Matte finish | Avery White 700 Matte | Arlon Ocean Blue 31 Matte |
|---|---|---|

**DESCRIPTION**

1. Deep current cladding panel from 3mm aluminium router cut and folded with 54mm returns. Panel to match Pantone 302C matte finish. Internal 50mm SHS aluminium frame mechanically fixed back to substrate.
2. Graphics on face panel to be Avery white 700 and Arlon Ocean Blue 31 with 2 pac paint clear coat finish.

This design/artwork is the property of Opalescent Group and is subject to recall. Reproduction in any material form is reserved under copyright law.

All dimensions in millimetres unless noted. Use figured dimensions in preference to scaling. Due to variations in printers and monitors the colours in this drawing are not an accurate representation of the final product.

Opalescent uses high-quality, HP eco-friendly printing technology - certified for low chemical emissions and indoor air quality.

| REV | AMENDMENT | DATE | REV | AMENDMENT | DATE |
|---|---|---|---|---|---|
| A | PRELIMINARY | 02/07/21 | | | |

| | | |
|---|---|---|
| CLIENT | ANZ | JOB# 19752 |
| PROJECT | MANLY | |
| DRAWING | 01 | |
| CONTACT | ---- | |
| ADDRESS | 59 The Corso, Manly, NSW 2095 | |
| DRAWN BY | BS | |

**opalescent**

| | |
|---|---|
| **ITEM** | STATUTORY SIGNAGE |
| **QUANTITY** | N/A |

## E1 > TRADING HOURS GRAPHIC

**SPEC:** PRINTED CWC IN REVERSE TO ULTRACLEAR
**GLAZING:** APPLIED TO INSIDE OF BRANCH GLAZING

**NOTE:**
- UNIQUE TO EACH SITE
- PINK REPRESENTS PRINTED WHITE

REFER TO ELEVATION FOR LOCATION

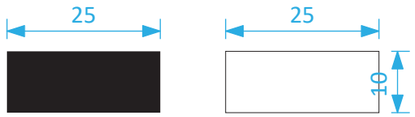


## SH > HEIGHT MARKERS

**SPEC:** 4X SELF ADHESIVE VINYL HEIGHT MARKERS INSTALLED TO ENTRY
**COLOUR:** BLACK **OR** WHITE DEPENDANT ON BEST CONTRAST TO DOOR STRUCTURE
**LIGHT FRAME:** AVERY 901 BLACK
**DARK FRAME:** AVERY 900 WHITE

**NOTE:**
- INSTALLED 1650 AFFL AT CENTRE OF LOWER MARKER
- INSTALLED 1830 AFFL AT CENTRE OF UPPER MARKER
- 2X EACH SIDE OF ENTRY

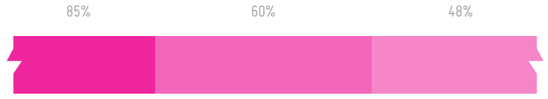


PRINTED WHITE TINTS

## GF1 > SAFETY STRIP

**SPEC:** UV BASED PRINT ON CLEAR IN REVERSE w GLOSS OVERLAMINATE
**APPLICATION:** APPLIED TO INSIDE OF BRANCH GLAZING

**NOTES:**
- SUPPLIED AS STANDARD LENGTHS, TRIMMED ON SITE TO SUIT
- HEIGHT OFF GROUND VARIES AS PER STATE REQUIREMENTS (1000MM NOMINAL)

This design/artwork is the property of Opalescent Group and is subject to recall. Reproduction in any material form is reserved under copyright law.

All dimensions in millimetres unless noted. Use figured dimensions in preference to scaling. Due to variations in printers and monitors the colours in this drawing are not an accurate representation of the final product.

Opalescent uses high-quality, HP eco-friendly printing technology - certified for low chemical emissions and indoor air quality.

| REV | AMENDMENT | DATE | REV | AMENDMENT | DATE |
|---|---|---|---|---|---|
| A | PRELIMINARY | 02/07/21 | | | |

| | | |
|---|---|---|
| CLIENT | ANZ | JOB# 19752 |
| PROJECT | MANLY | |
| DRAWING | 01 | |
| CONTACT | ---- | |
| ADDRESS | 59 The Corso, Manly, NSW 2095 | |
| DRAWN BY | BS | |

**opalescent**

## ANZ - SIGNAGE FINISHES

| SWATCH | DESCRIPTION | PAINT 2 PACK (P) | PAINT ENAMEL (PE) | VINYL TRANSLUCENT (VT) | VINYL OPAQUE (VO) | ALCADEX (ALCADEX) | PLYWOOD | DIGITAL PRINT (DP) |
|---|---|---|---|---|---|---|---|---|
| | 1<br>DEEP CURRENT<br>PANTONE 302 C | FINISH – P1<br>SUPPLIER – DUPONT<br>SPEC – ANZ DEEP<br>CURRENT MATT<br>15102014 | FINISH – PE-1<br>SUPPILER – DULUX<br>SPEC – BLUE BASE 1L<br>CODE – M4.00 /<br>TT28.00 / C29.00 | N/A | FINISH – VO1<br>SUPPLIER – ARLON<br>SPEC – MIDNIGHT<br>BLUE 65 | FINISH – AL1<br>SUPPLIER –<br>ALUCOBOND/OPALESCENT<br>SPEC – DEEP<br>CURRENT SATIN<br>20141226 | 12mm PLY AUSTRALIAN FSC/PEFC<br>CERTIFIED TASMANIAN OAK/VIC<br>ASH VENEER<br>DETAIL: CROWN CUT<br>SUPPLIER: BRIGGS VENEER<br>FINISH: SATIN WATERBASED LACQUER<br>TO MATCH PANTONE PROCESSC 302C,<br>TIMBER GRAIN TO REMAIN VISIBLE,<br>LOW VOC | FINISH – DP1<br>PANTONE 302 |
| | 2<br>OCEAN BLUE<br>PANTONE PROCESS CYAN C | FINISH – P2<br>SUPPLIER – DUPONT<br>SPEC – ANZ OCEAN<br>BLUE MATT<br>15102014 | FINISH – PE-2<br>SUPPLIER – DULUX<br>SPEC – DEEP BASE 1L<br>CODE – C 0Y 56N TT<br>1Y 8N | FINISH – VT1<br>SUPPLIER – SPANDEX<br>SPEC –<br>MEDITERRANEAN<br>BLUE | FINISH – VO2<br>SUPPLIER – ARLON<br>SPEC – OCEAN BLUE<br>31 | FINISH – AL2<br>SUPPLIER –<br>ALUCOBOND/OPALESCENT<br>SPEC – OCEAN BLUE<br>SATIN 2015211 | 12mm PLY AUSTRALIAN FSC/PEFC<br>CERTIFIED TASMANIAN OAK/VIC<br>ASH VENEER<br>DETAIL: CROWN CUT<br>SUPPLIER: BRIGGS VENEER<br>FINISH: SATIN WATERBASED LACQUER<br>TO MATCH PANTONE PROCESS<br>CYAN C, 75% OPACITY,<br>TIMBER GRAIN TO REMAIN VISIBLE,<br>LOW VOC | FINISH – DP2<br>PANTONE PROCESS CYAN |
| | 3<br>WHITE | FINISH – P3<br>SUPPLIER – DUPONT<br>SPEC – 2 PAC<br>POLYURETHANE<br>W8430 GLACIER<br>WHITE | FINISH – PE-3<br>SPEC – WHITE | FINISH - VT3<br>SPEC - AVERY QM 5500<br>COLOUR - WHITE | FINISH – VO3<br>SUPPLIER – AVERY<br>SPEC – AVERY 900<br>WHITE CASTT | FINISH – AL3<br>SUPPLIER –<br>ALUCOBOND<br>SPEC – SATIN WHITE | N/A | FINISH - DP3<br>WHITE |
| | 4<br>BLACK | FINISH – P4<br>SUPPLIER – DUPONT<br>SPEC – 2 PACK<br>POLYURETHANE<br>SATIN | FINISH – PE-4<br>SPEC – BLACK | N/A | FINISH – VO4<br>SUPPLIER – AVERY<br>SPEC – AVERY 901<br>BLACK | FINISH – AL4<br>SUPPLIER –<br>ALUCOBOND<br>SPEC – SATIN BLACK | N/A | FINISH - DP4<br>AS PER APPROVED<br>PROTOTYPE SAMPLE |
| | 5<br>PLYWOOD<br>CLEAR SATIN FINISH | N/A | N/A | N/A | N/A | N/A | 12mm PLY AUSTRALIAN FSC/PEFC<br>CERTIFIED TASMANIAN OAK/VIC<br>ASH VENEER<br>DETAIL: CROWN CUT<br>SUPPLIER: BRIGGS VENEER<br>FINISH: CLEAR SATIN WATERBASED<br>LAQUER, LOW VOC | N/A |
| | 6<br>PLYWOOD<br>WHITE SATIN FINISH | N/A | N/A | N/A | N/A | N/A | 12mm PLY AUSTRALIAN FSC/PEFC<br>CERTIFIED TASMANIAN OAK/VIC<br>ASH VENEER<br>DETAIL: CROWN CUT<br>SUPPLIER: BRIGGS VENEER<br>FINISH: 75% WHITE SATIN WATER<br>BASED LACQUER. TIMBER GRAIN<br>TO REMAIN VISIBLE, LOW VOC | N/A |

**ITEM** FINISHES SPECIFICATIONS

**QUANTITY** N/A

This design/artwork is the property of Opalescent Group and is subject to recall. Reproduction in any material form is reserved under copyright law.

All dimensions in millimetres unless noted. Use figured dimensions in preference to scaling. Due to variations in printers and monitors the colours in this drawing are not an accurate representation of the final product.

Opalescent uses high-quality, HP eco-friendly printing technology - certified for low chemical emissions and indoor air quality.

| REV | AMENDMENT | DATE | REV | AMENDMENT | DATE |
|---|---|---|---|---|---|
| A | PRELIMINARY | 02/07/21 | | | |

CLIENT ANZ JOB# 19752
PROJECT MANLY
DRAWING 01

CONTACT ----
ADDRESS 59 The Corso, Manly, NSW 2095

DRAWN BY BS

**opalescent**