THESE DRAWINGS ARE SUBJECT TO COPYRIGHT LAWS AND MAY NOT BE COPIED WITHOUT THE WRITTEN PERMISSION OF RAWSON HOMES PTY LTD-ACN 053 733 841 ©

NOTES:

DETAILS SHOWN ON THESE PLANS ARE INTENDED TO BE ACCURATE - HOWEVER INFORMATION WRITTEN INTO INDIVIDUAL CONTRACTS WILL TAKE PRECEDENCE OVER PLANS

* ALL DIMENSIONS ARE IN MILLIMETRES

* DO NOT SCALE - USE WRITTEN DIMENSIONS

RAWSON HOMES PTY LTD WILL TAKE NO RESPONSIBILITY FOR ANY VERBAL DISCUSSIONS OR INSTRUCTIONS. ALL CHANGES AND SPECIAL INCLUSIONS MUST BE DOCUMENTED IN WRITING

RAWSON HOMES

SCHEDULE OF DRAWINGS:

SHEET:	DRAWING TITLE:
1	TITLE SHEET
2	SITE PLAN
3	GROUND FLOOR PLAN
4	FIRST FLOOR PLAN
5	ELEVATIONS 1
6	ELEVATIONS 2
7	SECTION
8	CONCRETE SLAB PLAN
9	GND FLOOR ELECTRICAL PLAN
10	FIRST FLOOR ELECTRICAL PLAN
11	WET AREA DETAILS
12	CONSTRUCTION MANAGEMENT PLAN

ISSUE:	AMENDMENT DESCRIPTION:	DRAWN:	DATE:
A	COLOUR PLANS	SCD	17.06.11

This is the plan/spec. referred to in Fitzgerald Certifiers Certificate
Cert. No: 2011/1523 7/10/11
Paul Fitzgerald Accreditation No BPB 0119

COLOUR PLANS

RAWSON HOMES
UNIT 34/11-21 UNDERWOOD ROAD
HOMEBUSH NSW 2140
TELEPHONE 02 9764 6442
FAX 02 9764 6992
Builder's Licence No.33493C

CLIENT: MR & MRS McHUGH

SITE ADDRESS: LOT 93
25 MONTAUBAN AVENUE
SEAFORTH

HOUSETYPE:
MODEL: MANHATTAN 12
FACADE: CLASSIC
TYPE: DOUBLE GARAGE
SPECIFICATION: LUXE+ GOLD

DRAWING TITLE: TITLE SHEET

DRAWN BY:	DATE DRAWN:	CHECKED BY:	APPROVED FOR CONSTRUCTION:
SCD	17.06.11		

COUNCIL AREA: MANLY

SCALE: -

JOB No: J/001715

DRWG No.: 01

ISSUE: A

THIS DRAWING IS SUBJECT TO COPYRIGHT LAWS AND MAY NOT BE COPIED WITHOUT THE WRITTEN PERMISSION OF RAWSON HOMES PTY LTD-ACN 053 733 841 ©

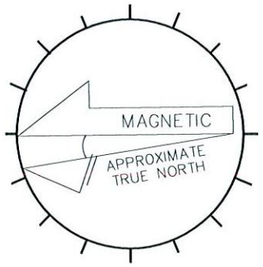

NORTH

LEGEND
KO: DENOTES KERB OUTLET
WC,EC,TC: DENOTES SERVICE CONDUIT
SV: DENOTES STOP VALVE
HYD: DENOTES HYDRANT

DATUM OF LEVELS: AUSTRALIAN HEIGHT DATUM
ORIGIN OF LEVELS: PM 5389 RL 85.929
SOURCE OF LEVELS: SCIMS

LOCATION PLAN
UBD REF: 197, A7

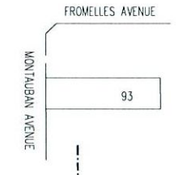

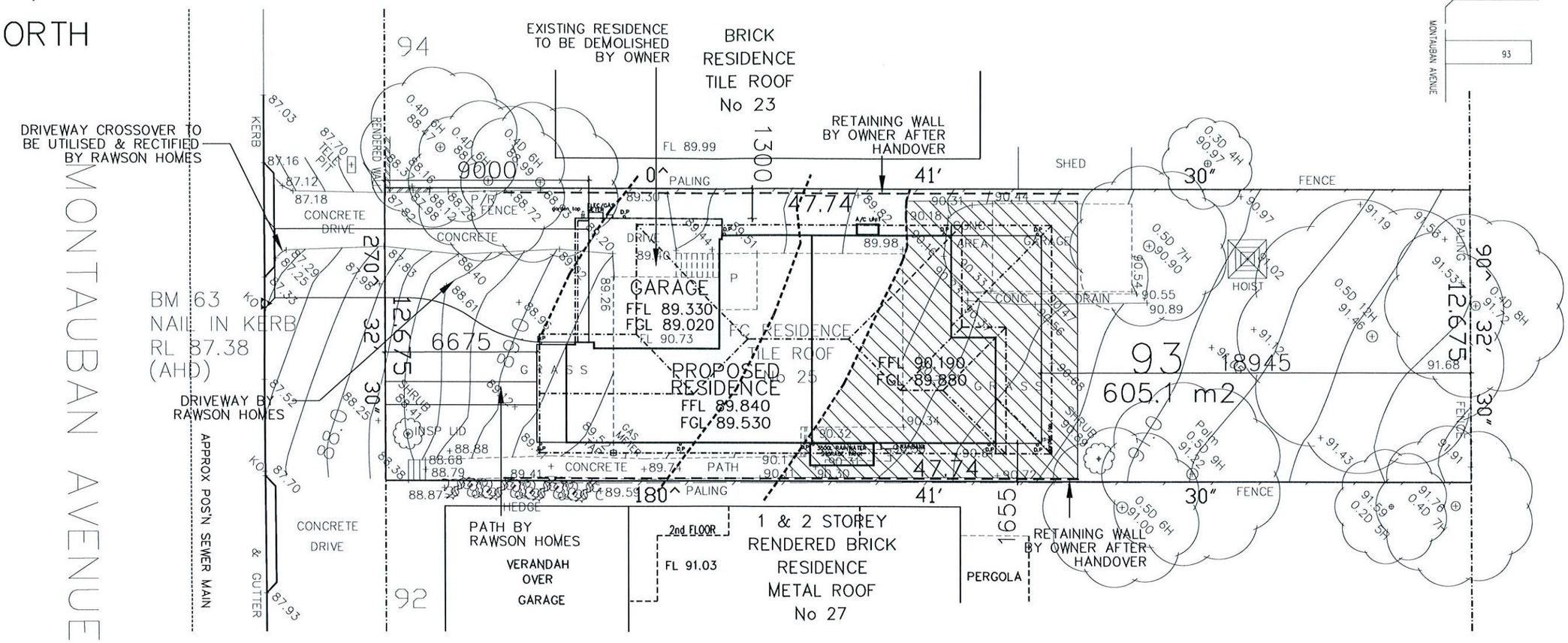

This plan forms part of the approved Certificate as issued by Fitzgerald Building Certifiers Pty Limited

NOTES:

PLEASE NOTE: DETAILS SHOWN ON THESE PLANS ARE INTENDED TO BE ACCURATE - HOWEVER INFORMATION WRITTEN INTO INDIVIDUAL CONTRACTS WILL TAKE PRECEDENCE OVER PLANS

* ALL DIMENSIONS ARE IN MILLIMETRES

* DO NOT SCALE - USE WRITTEN DIMENSIONS

RAWSON HOMES
UNIT 34/11-21 UNDERWOOD ROAD
HOMEBUSH NSW 2140
TELEPHONE 02 9764 6442
FAX 02 9764 6992
Builder's Licence No.33493C

CLIENT: MR & MRS McHUGH	HOUSETYPE:	DRAWN BY: SCD	DATE DRAWN: 17.06.11	CHECKED BY:	APPROVED FOR CONSTRUCTION:
SITE ADDRESS: LOT 93, 25 MONTAUBAN AVENUE, SEAFORTH	MODEL: MANHATTAN 12 FACADE: CLASSIC TYPE: DOUBLE GARAGE SPECIFICATION: LUXE+ GOLD	COUNCIL AREA: MANLY		SCALE: 1 : 200	
	DRAWING TITLE: SITE PLAN	JOB No: J/001715		DRWG No.: 02	ISSUE: A

THIS DRAWING IS SUBJECT TO COPYRIGHT LAWS AND MAY NOT BE COPIED WITHOUT THE WRITTEN PERMISSION OF RAWSON HOMES PTY LTD-ACN 053 733 841 ©

720 LIFT OFF HINGE TO WC

AC DUCTING WHEN APPLICABLE

HEIGHT OF ALL SQ. SETS 2150mm FROM FFL UNLESS OTHERWISE SHOWN

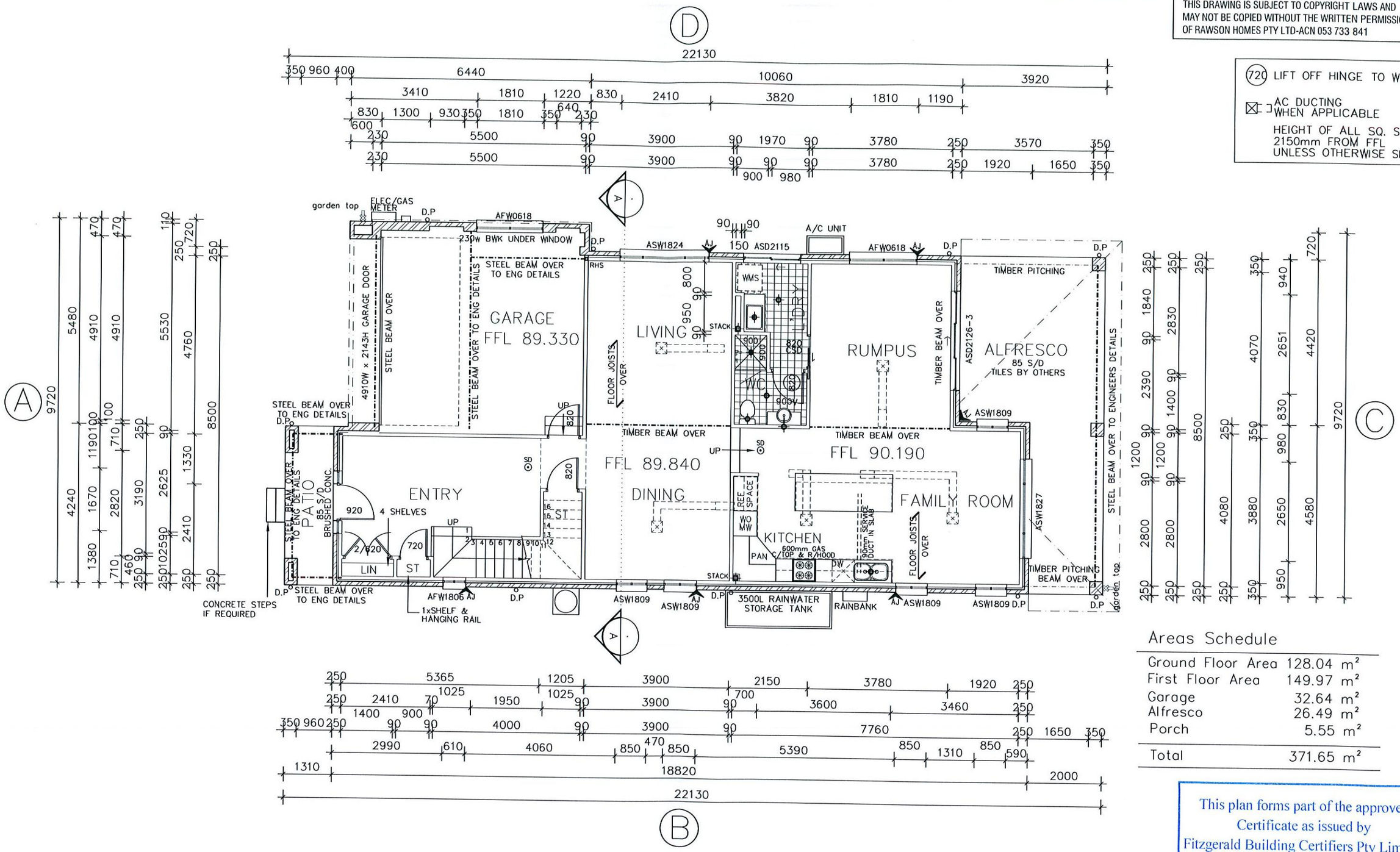

Areas Schedule

Ground Floor Area	128.04 m²
First Floor Area	149.97 m²
Garage	32.64 m²
Alfresco	26.49 m²
Porch	5.55 m²
Total	371.65 m²

This plan forms part of the approved Certificate as issued by Fitzgerald Building Certifiers Pty Limited

NOTES:

PLEASE NOTE: DETAILS SHOWN ON THESE PLANS ARE INTENDED TO BE ACCURATE - HOWEVER INFORMATION WRITTEN INTO INDIVIDUAL CONTRACTS WILL TAKE PRECEDENCE OVER PLANS

* ALL DIMENSIONS ARE IN MILLIMETRES

* DO NOT SCALE - USE WRITTEN DIMENSIONS

RAWSON HOMES
UNIT 34/11-21 UNDERWOOD ROAD
HOMEBUSH NSW 2140
TELEPHONE 02 9764 6442
FAX 02 9764 6992
Builder's Licence No.33493C

CLIENT: MR & MRS McHUGH

SITE ADDRESS: LOT 93, 25 MONTAUBAN AVENUE, SEAFORTH

HOUSETYPE:
MODEL: MANHATTAN 12
FACADE: CLASSIC
TYPE: DOUBLE GARAGE
SPECIFICATION: LUXE+ GOLD

DRAWING TITLE: GROUND FLOOR PLAN

DRAWN BY:	DATE DRAWN:	CHECKED BY:	APPROVED FOR CONSTRUCTION:
SCD	17.06.11		

COUNCIL AREA: MANLY

SCALE: 1 : 100

JOB No: J/001715

DRWG No.: 03

ISSUE: A

THIS DRAWING IS SUBJECT TO COPYRIGHT LAWS AND MAY NOT BE COPIED WITHOUT THE WRITTEN PERMISSION OF RAWSON HOMES PTY LTD-ACN 053 733 841 ©

720 LIFT OFF HINGE TO WC

AC DUCTING WHEN APPLICABLE

HEIGHT OF ALL SQ. SETS 2150mm FROM FFL UNLESS OTHERWISE SHOWN

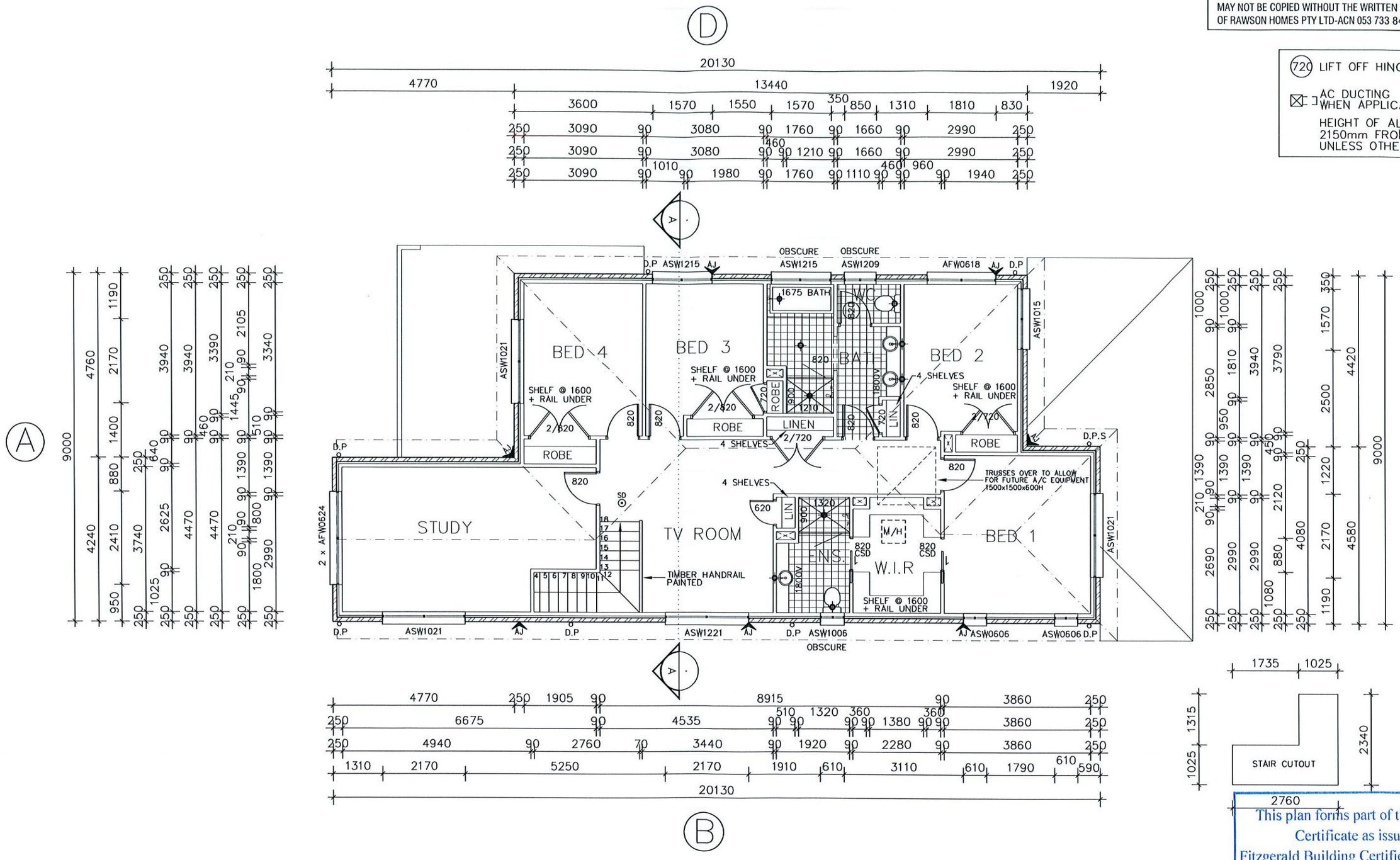

NOTES:

PLEASE NOTE: DETAILS SHOWN ON THESE PLANS ARE INTENDED TO BE ACCURATE - HOWEVER INFORMATION WRITTEN INTO INDIVIDUAL CONTRACTS WILL TAKE PRECEDENCE OVER PLANS

* ALL DIMENSIONS ARE IN MILLIMETRES

* DO NOT SCALE - USE WRITTEN DIMENSIONS

RAWSON HOMES
UNIT 34/11-21 UNDERWOOD ROAD
HOMEBUSH NSW 2140
TELEPHONE 02 9764 6442
FAX 02 9764 6992
Builder's Licence No.33493C

CLIENT: MR & MRS McHUGH

SITE ADDRESS: LOT 93, 25 MONTAUBAN AVENUE, SEAFORTH

HOUSETYPE:
MODEL: MANHATTAN 12
FACADE: CLASSIC
TYPE: DOUBLE GARAGE
SPECIFICATION: LUXE+ GOLD

DRAWING TITLE: FIRST FLOOR PLAN

DRAWN BY:	DATE DRAWN:	CHECKED BY:	APPROVED FOR CONSTRUCTION:
SCD	17.06.11		

COUNCIL AREA:	SCALE:
MANLY	1 : 100

JOB No:	DRWG No.:	ISSUE:
J/001715	04	A

THIS DRAWING IS SUBJECT TO COPYRIGHT LAWS AND MAY NOT BE COPIED WITHOUT THE WRITTEN PERMISSION OF RAWSON HOMES PTY LTD-ACN 053 733 841 ©

PROVIDE FIBREGLASS MESH FLYSCREENS TO ALL OPEN WINDOWS & SLIDING DOORS

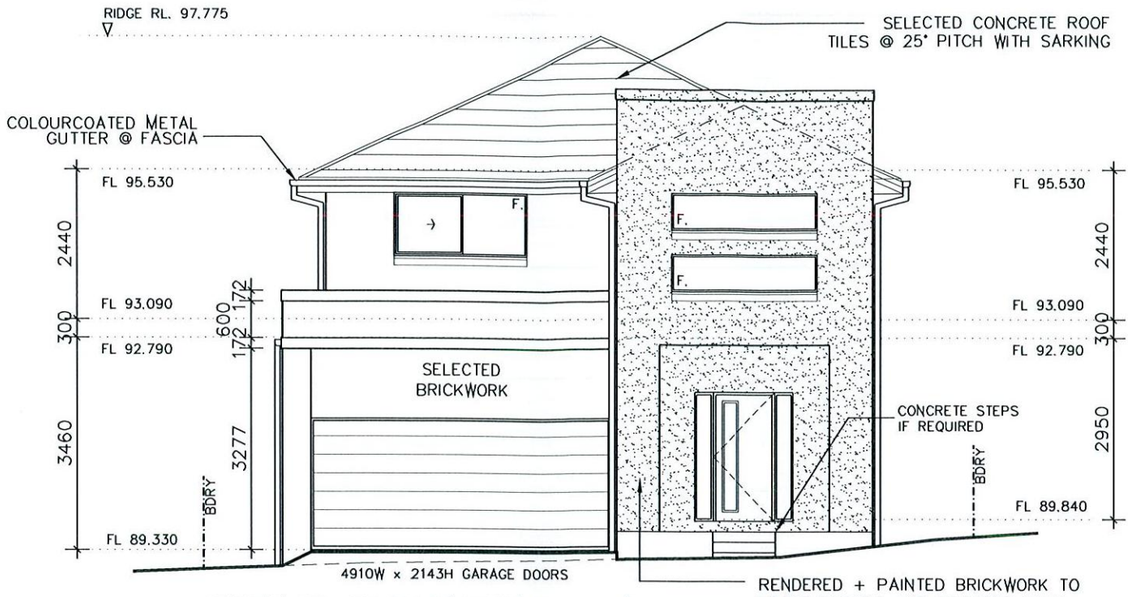

FRONT ELEVATION – A

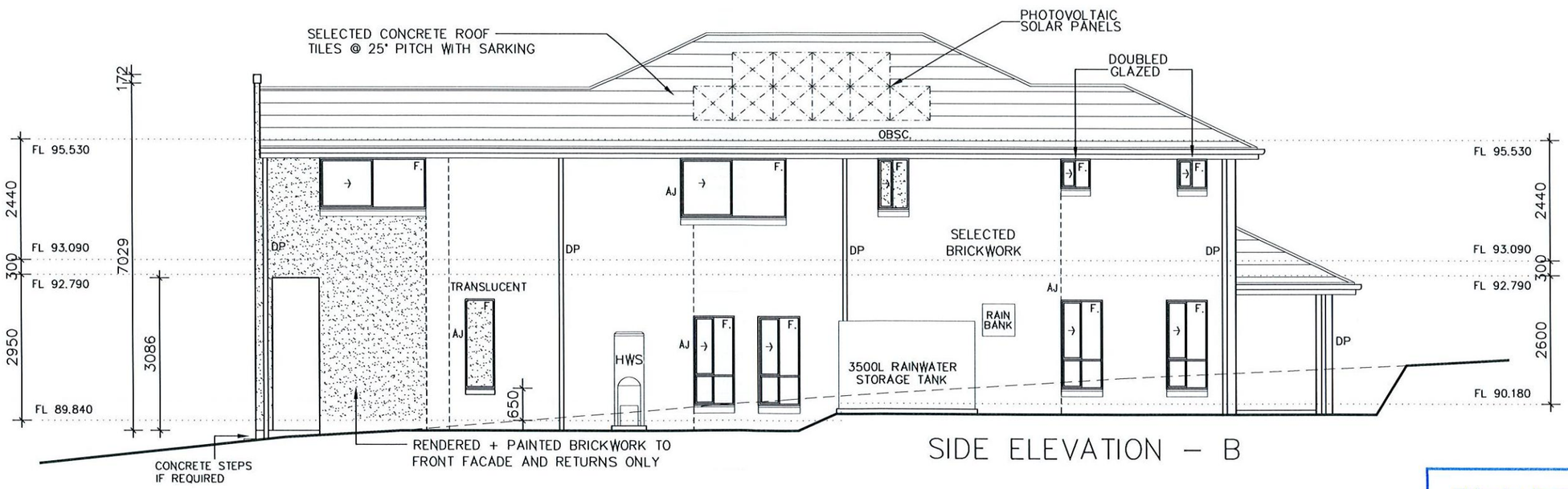

SIDE ELEVATION – B

This plan forms part of the approved Certificate as issued by Fitzgerald Building Certifiers Pty Limited

NOTES:

PLEASE NOTE: DETAILS SHOWN ON THESE PLANS ARE INTENDED TO BE ACCURATE - HOWEVER INFORMATION WRITTEN INTO INDIVIDUAL CONTRACTS WILL TAKE PRECEDENCE OVER PLANS

* ALL DIMENSIONS ARE IN MILLIMETRES

* DO NOT SCALE - USE WRITTEN DIMENSIONS

RAWSON HOMES
UNIT 34/11-21 UNDERWOOD ROAD
HOMEBUSH NSW 2140
TELEPHONE 02 9764 6442
FAX 02 9764 6992
Builder's Licence No.33493C

CLIENT: MR & MRS McHUGH

SITE ADDRESS: LOT 93, 25 MONTAUBAN AVENUE, SEAFORTH

HOUSETYPE:
MODEL: MANHATTAN 12
FACADE: CLASSIC
TYPE: DOUBLE GARAGE
SPECIFICATION: LUXE+ GOLD

DRAWING TITLE: ELEVATION 1

DRAWN BY:	DATE DRAWN:	CHECKED BY:	APPROVED FOR CONSTRUCTION:
SCD	17.06.11		

COUNCIL AREA: MANLY

SCALE: 1 : 100

JOB No: J/001715

DRWG No.: 05

ISSUE: A

THIS DRAWING IS SUBJECT TO COPYRIGHT LAWS AND MAY NOT BE COPIED WITHOUT THE WRITTEN PERMISSION OF RAWSON HOMES PTY LTD-ACN 053 733 841 ©

PROVIDE FIBREGLASS MESH FLYSCREENS TO ALL OPEN WINDOWS & SLIDING DOORS

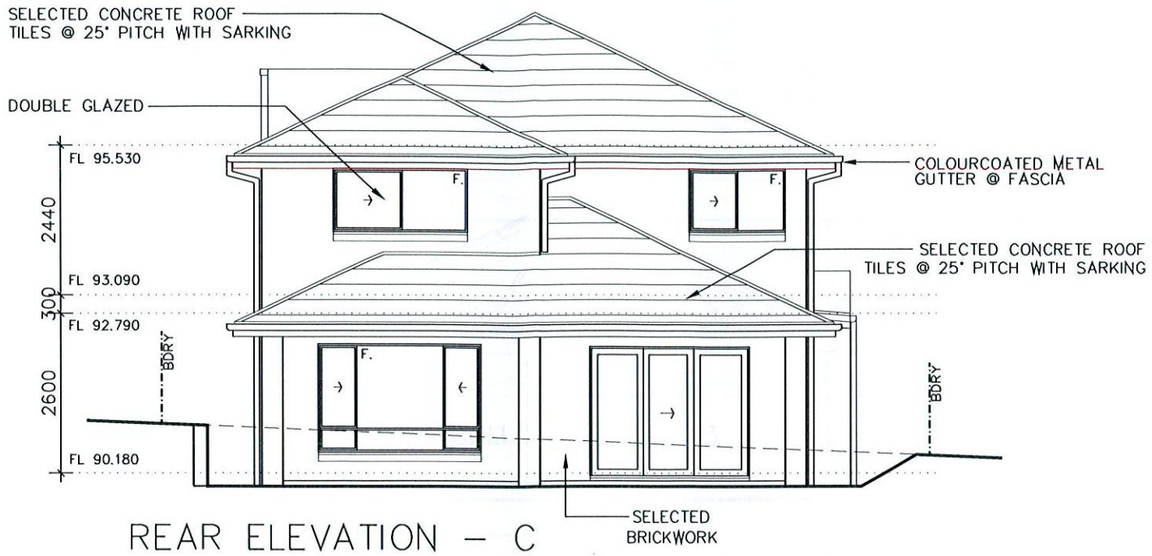

REAR ELEVATION – C

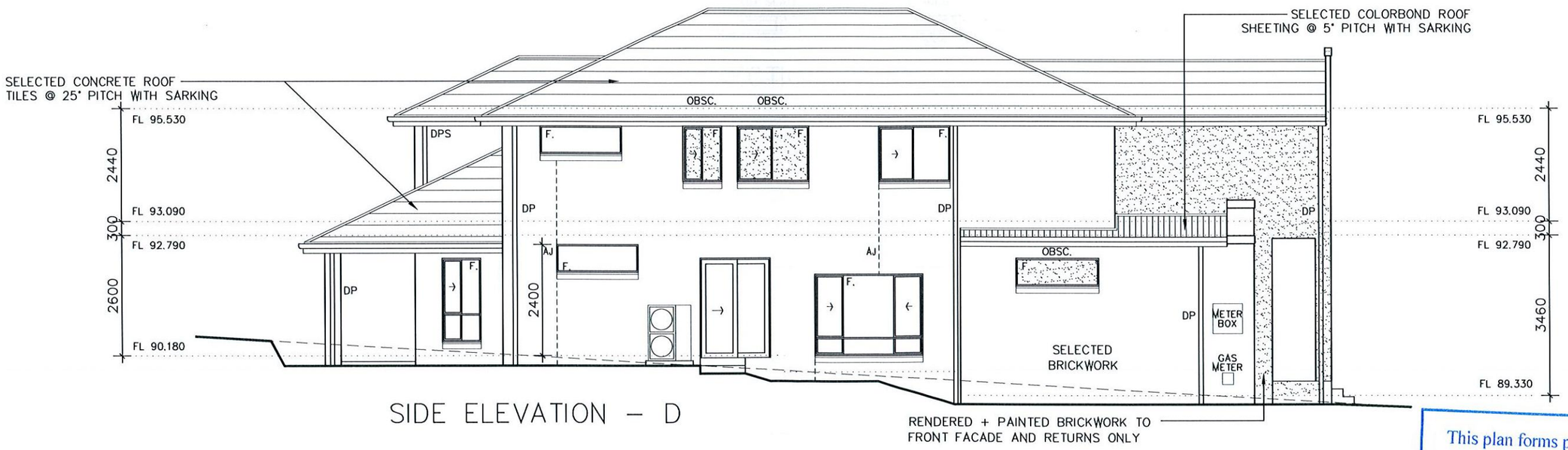

SIDE ELEVATION – D

This plan forms part of the approved Certificate as issued by Fitzgerald Building Certifiers Pty Limited

NOTES:

PLEASE NOTE: DETAILS SHOWN ON THESE PLANS ARE INTENDED TO BE ACCURATE - HOWEVER INFORMATION WRITTEN INTO INDIVIDUAL CONTRACTS WILL TAKE PRECEDENCE OVER PLANS

* ALL DIMENSIONS ARE IN MILLIMETRES

* DO NOT SCALE - USE WRITTEN DIMENSIONS

RAWSON HOMES
UNIT 34/11-21 UNDERWOOD ROAD
HOMEBUSH NSW 2140
TELEPHONE 02 9764 6442
FAX 02 9764 6992
Builder's Licence No.33493C

CLIENT: MR & MRS McHUGH	HOUSETYPE:	DRAWN BY: SCD	DATE DRAWN: 17.06.11	CHECKED BY:	APPROVED FOR CONSTRUCTION:
SITE ADDRESS: LOT 93, 25 MONTAUBAN AVENUE, SEAFORTH	MODEL: MANHATTAN 12 FACADE: CLASSIC TYPE: DOUBLE GARAGE SPECIFICATION: LUXE+ GOLD	COUNCIL AREA: MANLY		SCALE: 1 : 100	
	DRAWING TITLE: ELEVATION 2	JOB No: J/001715		DRWG No.: 06	ISSUE: A

THIS DRAWING IS SUBJECT TO COPYRIGHT LAWS AND MAY NOT BE COPIED WITHOUT THE WRITTEN PERMISSION OF RAWSON HOMES PTY LTD-ACN 053 733 841 ©

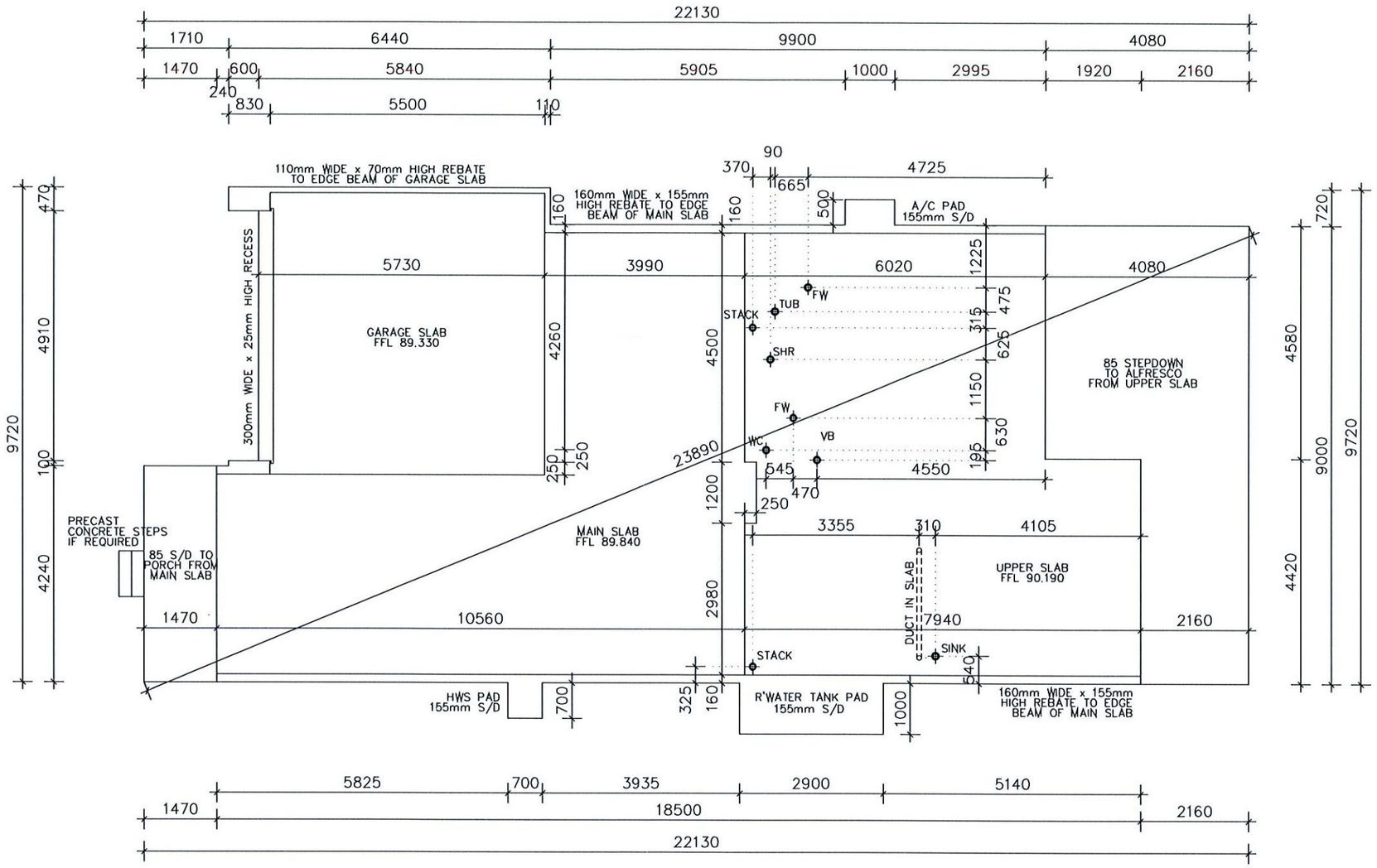

This plan forms part of the approved Certificate as issued by Fitzgerald Building Certifiers Pty Limited

NOTES:

PLEASE NOTE: DETAILS SHOWN ON THESE PLANS ARE INTENDED TO BE ACCURATE - HOWEVER INFORMATION WRITTEN INTO INDIVIDUAL CONTRACTS WILL TAKE PRECEDENCE OVER PLANS

* ALL DIMENSIONS ARE IN MILLIMETRES

* DO NOT SCALE - USE WRITTEN DIMENSIONS

RAWSON HOMES
UNIT 34/11-21 UNDERWOOD ROAD
HOMEBUSH NSW 2140
TELEPHONE 02 9764 6442
FAX 02 9764 6992
Builder's Licence No.33493C

CLIENT: MR & MRS McHUGH

SITE ADDRESS: LOT 93, 25 MONTAUBAN AVENUE, SEAFORTH

HOUSETYPE:
MODEL: MANHATTAN 12
FACADE: CLASSIC
TYPE: DOUBLE GARAGE
SPECIFICATION: LUXE+ GOLD

DRAWING TITLE: CONCRETE SLAB PLAN

DRAWN BY:	DATE DRAWN:	CHECKED BY:	APPROVED FOR CONSTRUCTION:
SCD	17.06.11		

COUNCIL AREA: MANLY

SCALE: 1 : 100

JOB No: J/001715

DRWG No.: 08

ISSUE: A

THIS DRAWING IS SUBJECT TO COPYRIGHT LAWS AND MAY NOT BE COPIED WITHOUT THE WRITTEN PERMISSION OF RAWSON HOMES PTY LTD-ACN 053 733 841 ©

LEGEND
KO: DENOTES KERB OUTLET
WC,EC,TC: DENOTES SERVICE CONDUIT
SV: DENOTES STOP VALVE
HYD: DENOTES HYDRANT

DATUM OF LEVELS: AUSTRALIAN HEIGHT DATUM
ORIGIN OF LEVELS: PM 5389 RL 85.929
SOURCE OF LEVELS: SCIMS

LOCATION PLAN
UBD REF: 197, A7

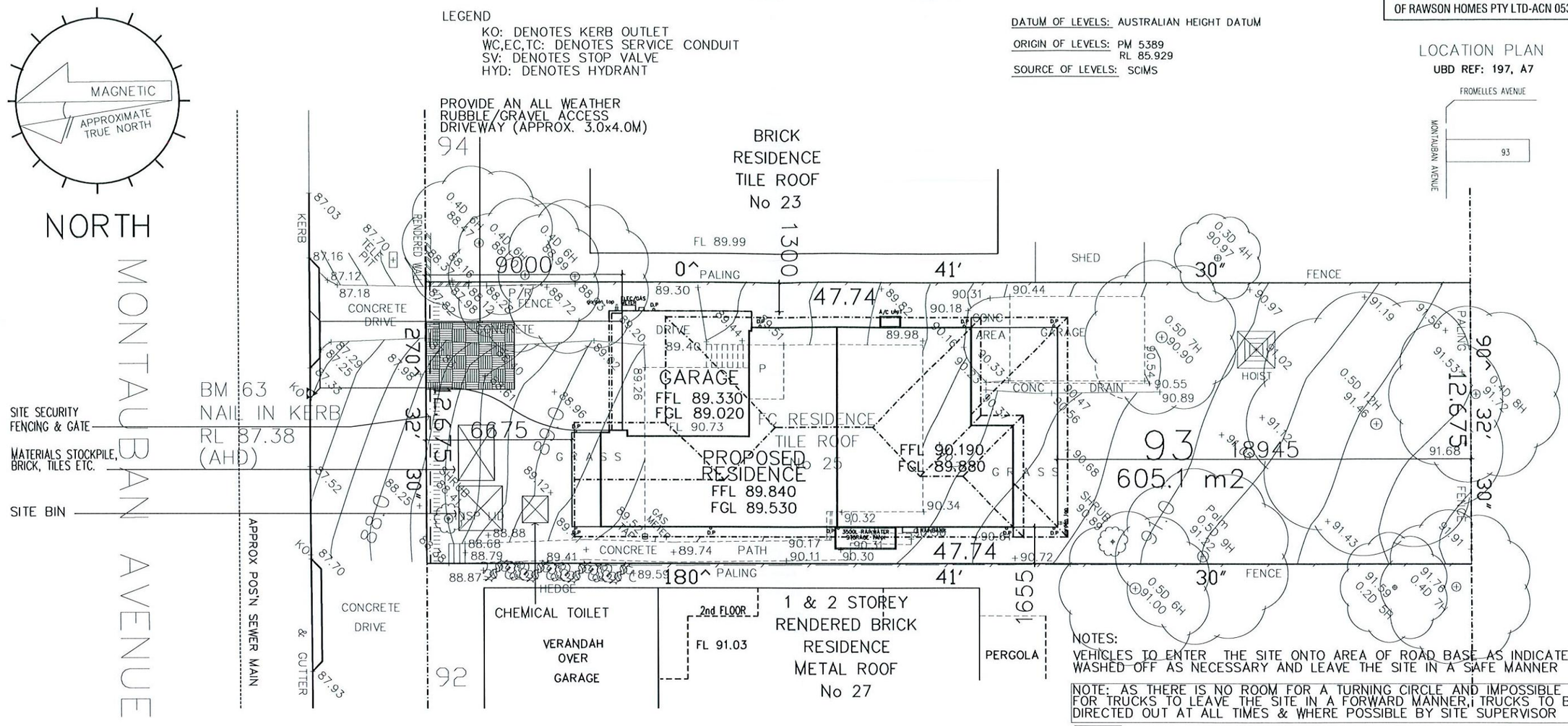

NOTES:
VEHICLES TO ENTER THE SITE ONTO AREA OF ROAD BASE AS INDICATED WASHED OFF AS NECESSARY AND LEAVE THE SITE IN A SAFE MANNER

NOTE: AS THERE IS NO ROOM FOR A TURNING CIRCLE AND IMPOSSIBLE FOR TRUCKS TO LEAVE THE SITE IN A FORWARD MANNER, TRUCKS TO BE DIRECTED OUT AT ALL TIMES & WHERE POSSIBLE BY SITE SUPERVISOR

DUST CONTROL MEASURES:

- SITE TO BE WET DOWN PRIOR TO ANY DEMOLITION OR CONSTRUCTION WORK
- AN AREA OF ROAD BASE WILL BE POSITIONED FOR HEAVY VEHICLES TO REDUCE DUST & PROVIDE AN AREA TO WASH TRUCKS OFF (IF REQUIRED)

NOISE & VIBRATION MEASURES

- ALL EXCAVATION WILL BE CARRIED OUT BETWEEN THE TIME STIPULATED IN THE COUNCIL CONDITIONS.
- MACHINERY SIZE WILL BE KEPT TO A MINIMUM REQUIREMENT FOR THE JOB.

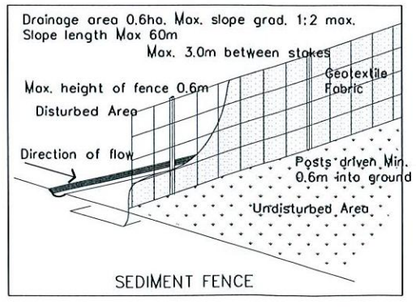

SEDIMENT FENCE

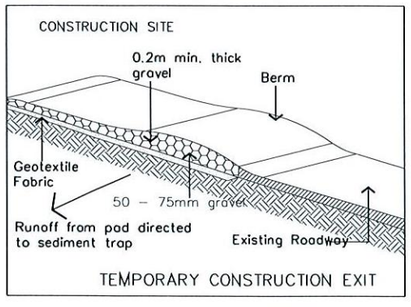

TEMPORARY CONSTRUCTION EXIT

SEDIMENT CONTROL POLICY OBJECTIVE
- To minimise disturbance to soil and vegetation on the site
- To ensure the protection of the environment by adequately controlling the site to prevent erosion and the export of sediment from the site
- Direct clean uphill water around the building site
- Limit access to one point and stabilise
- Install sediment fences below the site
- Stockpile and protect stripped topsoil
- Store materials within the sediment fence envelope
- Provide a protected washout area
- Connect stormwater before roof is laid
- Maintain controls
- Respread topsoil and stabilise site

FOR LOCATION OF SEDIMENT CONTROL REFER TO SITE PLAN
EXACT LOCATION TO BE DETERMINED ON SITE

This plan forms part of the approved Certificate as issued by Fitzgerald Building Certifiers Pty Limited

NOTE:-HOURS OF OPERATION:- 7 AM – 5 PM, MONDAY TO FRIDAY. ONLY

NOTES:
PLEASE NOTE: DETAILS SHOWN ON THESE PLANS ARE INTENDED TO BE ACCURATE - HOWEVER INFORMATION WRITTEN INTO INDIVIDUAL CONTRACTS WILL TAKE PRECEDENCE OVER PLANS
* ALL DIMENSIONS ARE IN MILLIMETRES
* DO NOT SCALE - USE WRITTEN DIMENSIONS

RAWSON HOMES
UNIT 34/11-21 UNDERWOOD ROAD
HOMEBUSH NSW 2140
TELEPHONE 02 9764 6442
FAX 02 9764 6992
Builder's Licence No.33493C

CLIENT:	MR & MRS McHUGH
SITE ADDRESS:	LOT 93 25 MONTAUBAN AVENUE SEAFORTH
HOUSETYPE:	
MODEL:	MANHATTAN 12
FACADE:	CLASSIC
TYPE:	DOUBLE GARAGE
SPECIFICATION:	LUXE+ GOLD
DRAWN BY:	SCD
DATE DRAWN:	17.06.11
CHECKED BY:	
APPROVED FOR CONSTRUCTION:	
COUNCIL AREA:	MANLY
SCALE:	1 : 200
DRAWING TITLE:	CONST. MGMT PLAN
JOB No:	J/001715
DRWG No.:	12
ISSUE:	A

LEGEND (NTS)

- MASS CONCRETE PIERS. REFER PIER SPECIFICATION
- START POD LOCATION
- 1090 SQ STANDARD POD
- CENTRE LINE OF RIB
- 3-N12 TRIMMERS 2000 LONG
- 600 SQ MASS CONCRETE POD CUT OUT
- STEEL/TIMBER BEAMS OVER
- WALLS OVER
- FLOOR JOIST DIRECTION OVER ASSUMED BY ENGINEER
- DENOTES SLAB LEVELS TAKEN FROM ARCHITECTURAL

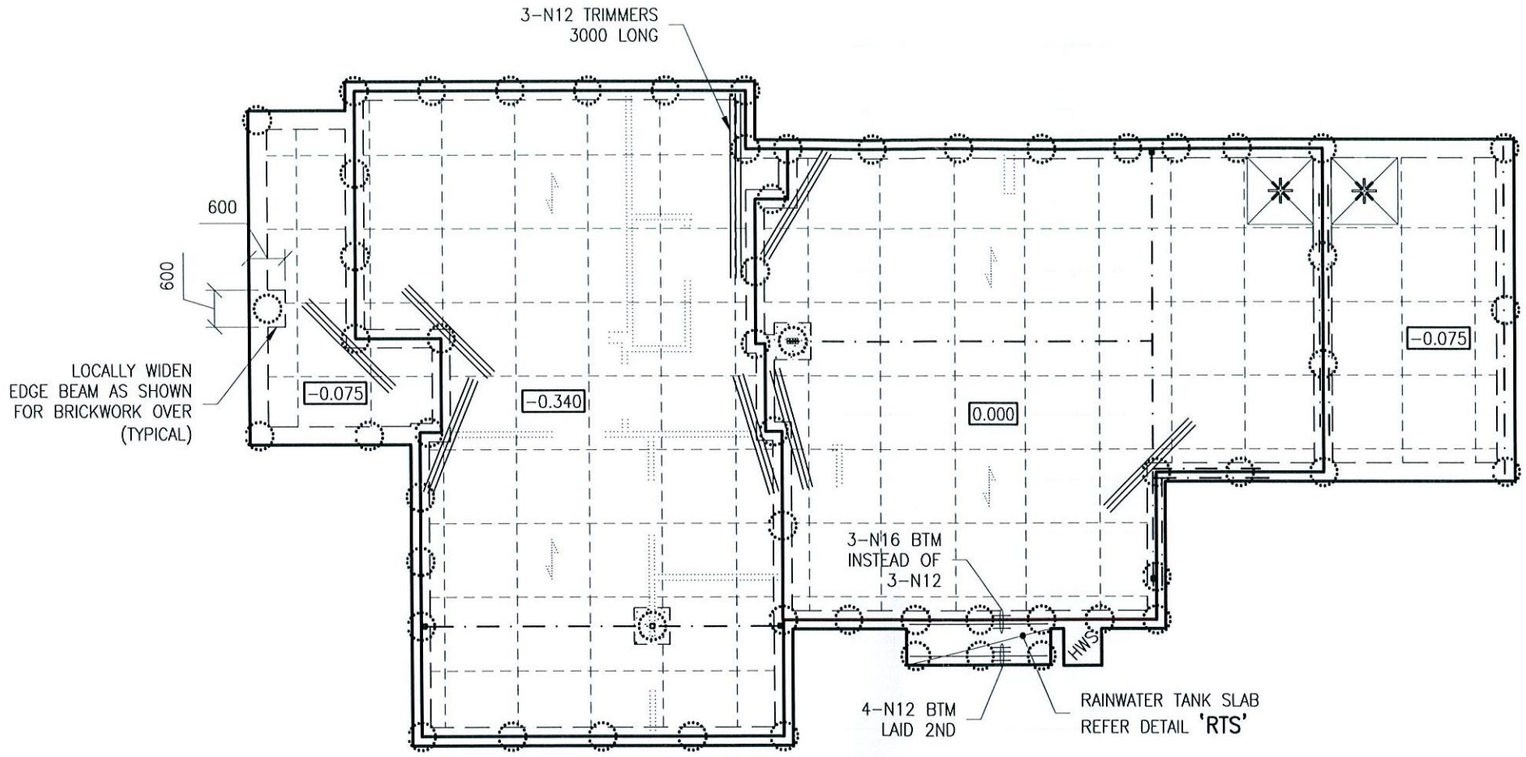

WAFFLE RAFT DESIGN LAYOUT DRAWING

IF IN DOUBT, CONTACT ENGINEER.

THESE DETAILS HAVE BEEN PREPARED IN ACCORDANCE WITH ARCHITECTURAL	
PREPARED BY:	RAWSON HOMES
DRAWING/JOB No.	–
REVISION/ISSUE:	02
DATED:	FEB 11

WAFFLE RAFT SPECIFICATION

SLAB THICKNESS:	85
SLAB FABRIC:	SL72
F'c AT 28 DAYS:	N20 U.N.O
SLUMP:	100
MAXIMUM SIZE AGGREGATE	20

THE OWNERS ATTENTION SHALL BE DRAWN TO APPENDIX 'A' 'PERFORMANCE REQUIREMENTS AND FOUNDATION MAINTENANCE' OF AS 2870 AND CSIRO PUBLICATION 'GUIDE TO HOME OWNERS ON FOUNDATION MAINTENANCE AND FOOTING PERFORMANCE'. CURRENT EDITIONS.

ARTICULATION NOTE:

THIS SLAB IS DESIGNED FOR ARTICULATED MASONRY VENEER TYPE CONSTRUCTION AND ARTICULATION JOINTS ARE TO BE PROVIDED AS PER THE B.C.A. VOL.2 CURRENT EDITION

TRUSSED ROOF NOTE:

SLAB HAS BEEN DESIGNED FOR ROOF LOADING TO BE SUPPORTED BY PROPRIETARY TRUSSES ONTO EXTERNAL WALLS ONLY.

PIER SPECIFICATION

DIAMETER Ø	400
F'c AT 28 DAYS:	N15 U.N.O
SLUMP:	80
MAXIMUM SIZE AGGREGATE	20

EXPECTED CONCRETE PIERS/FOOTINGS REQUIRED TO UNIFORM BEARING. ENGINEER AND COUNCIL TO INSPECT GROUND BEARING OF PIERS/FOOTINGS PRIOR TO POURING OF CONCRETE.

ENGINEER TO BE NOTIFIED IF PIERS/FOOTINGS COLLAPSE IN CONSTRUCTION. BUCKET OR SCREW PIERS MAY NEED TO BE USED

SITE CLASSIFICATION	P/M
WIND CLASSIFICATION	N2
SITE LOCATION CLASSIFICATION	SL2

SL1. LESS THAN 1km FROM BREAKING SURF OR LESS THAN 100m FROM SALT WATER NOT SUBJECT TO BREAKING SURF OR WITHIN HEAVY INDUSTRIAL AREAS.

SL2. 1km OR MORE BUT LESS THAN 10km FROM BREAKING SURF OR 100m OR MORE BUT LESS THAN 1km FROM SALT WATER NOT SUBJECT TO BREAKING SURF

SL3. 10km OR MORE FROM BREAKING SURF OR 1km OR MORE FROM SALT WATER NOT SUBJECT TO BREAKING SURF.

REFER BCA CLASS 1 AND CLASS 10 BUILDINGS HOUSING PROVISIONS VOLUME 2 FOR TABLES:

- PROTECTIVE COATINGS FOR STEELWORK (TABLE 3.4.4.2)
- CORROSION PROTECTION OF BUILT-IN STRUCTURAL STEEL MEMBERS (TABLE 3.3.3.2)
- CORROSION PROTECTION FOR WALL TIES (TABLE 3.3.3.1)

This is the plan/spec. referred to in Fitzgerald Certifiers Certificate
Cert. No: 2011/1523 7/10/11
Paul Fitzgerald Accreditation No BPB 0119

DRAWN	DATE	AMENDMENT	REV

CLIENT: RAWSON HOMES
UNIT 34/11-21 UNDERWOOD ROAD
HOMEBUSH NSW 2140
TELEPHONE 02 9764 6442
FAX 02 9764 6992
Builder's License No.33493C

FOR: MR & MRS HART

SITE ADDRESS: LOT 17 (178) WYADRA AVENUE, NORTH MANLY

RESIDENTIAL ENGINEERING CONSULTING ENGINEERS
NSW: BPB 0255 VIC: EC 24609 QLD: RPEQ 4109
1/19 Jonathan Street, Greystanes NSW 2145 T: 02 9896 5494 F: 02 9636 1064
3/256 Argyle Street, Moss Vale NSW 2577 T: 02 4869 5003 F: 02 4869 5008
www.residentialengineering.com.au enquiries@residentialengineering.com.au

APPROVED BY: A.W. McCarthy
A.W. McCARTHY
B.Sc.(Eng), M.I.E.Aust, N.P.E.R., C.P.Eng.
NSW: BPB 0255
VIC: EC 24609
QLD: RPEQ 4109

JOB No.	REVISION
RW391	

DATE:	SCALE:	SHEET No.
12/08/11	1:100	1/9
CLIENT REF:	DRAWN: C.O.	

COPYRIGHT: THIS DRAWING REMAINS THE PROPERTY OF RESIDENTIAL ENGINEERING AND MAY NOT BE ALTERED IN ANY WAY WITHOUT RESIDENTIAL ENGINEERING WRITTEN CONSENT.

GENERAL NOTES

G1. ENGINEERS STRUCTURAL DRAWINGS ARE SIGNED AND ISSUED ON THE UNDERSTANDING THAT THE BUILDER MAINTAINS IN FORCE, PROPER AND ADEQUATE CONTRACT WORKS INSURANCE AND PUBLIC LIABILITY INSURANCE DURING THE FULL COURSE OF THE CONSTRUCTION, AND/OR ANY MAINTENANCE PERIOD. CLAIMS OF DAMAGE TO ANY ADJACENT PROPERTY OR BUILDING IS NOT THE RESPONSIBILITY OF THE ENGINEER.

G2. THESE DRAWINGS SHALL BE READ IN CONJUNCTION WITH ALL ARCHITECTURAL AND OTHER CONSULTANTS DRAWINGS AND SPECIFICATIONS AND WITH SUCH OTHER WRITTEN INSTRUCTIONS AS MAY BE ISSUED DURING THE COURSE OF THE CONTRACT. ALL DISCREPANCIES SHALL BE REFERRED TO THE ARCHITECT FOR DECISION BEFORE PROCEEDING WITH THE WORK.

G3. DURING CONSTRUCTION THE BUILDING SHALL BE MAINTAINED IN A STABLE CONDITION AND NO PART SHALL BE OVERSTRESSED AT ANY TIME. TEMPORARY BRACING SHALL BE PROVIDED BY THE CONTRACTOR AS REQUIRED. THE CONTRACTOR SHALL BE RESPONSIBLE FOR ANY DAMAGE TO THE WORKS DURING CONSTRUCTION.

G4. ALL WORKMANSHIP AND MATERIALS SHALL BE IN ACCORDANCE WITH THE REQUIREMENTS OF THE CURRENT EDITIONS OF THE SAA CODES AND THERE-BY LAWS AND ORDINANCES OF THE RELEVANT BUILDING AUTHORITY.

G5. DIMENSIONS SHALL NOT BE OBTAINED BY SCALING THE STRUCTURAL DRAWINGS. REFER TO ARCHITECTURAL DRAWINGS FOR SET OUT PLAN MEASUREMENTS. ANY SET OUT DIMENSIONS SHOWN ON THIS DOCUMENT SHALL BE VERIFIED BY THE BUILDER.

G6. ANY DISCREPANCIES/SUBSTITUTION IN THESE DOCUMENTS SHALL BE REFERRED TO THE ENGINEER FOR DECISION BEFORE PROCEEDING WITH THE WORK.

G7. THE SECTIONS/DETAILS ON THESE DRAWINGS ARE INTENDED TO GIVE THE STRUCTURAL SPECIFICATIONS ONLY. ARCHITECTURAL SECTIONS/DETAILS ON THESE DRAWINGS ARE ILLUSTRATIVE ONLY.

G8. THESE DOCUMENTS ARE SIGNED SUBJECT TO CERTIFICATE OF INSPECTION BEING ISSUED BY THIS FIRM. ALL PIERS, SLAB AND FOOTING REINFORCEMENT SHALL BE INSPECTED BY THE ENGINEER PRIOR TO THE POURING OF CONCRETE. GIVE 24hrs NOTICE TO THE ENGINEER.

SITE CLASSIFICATION

C1. THE SITE HAS BEEN CLASSIFIED BY RESIDENTIAL ENGINEERING IN ACCORDANCE WITH AS 2870 RESIDENTIAL SLABS AND FOOTINGS. THESE DOCUMENTS HAVE BEEN PREPARED USING THE ABOVE CODE ON THE BASIS OF A 'M' CLASSIFICATION, HOWEVER, THE SOIL TYPE AND SITE CONDITIONS SHOULD BE CHECKED BY THIS CONSULTANCY PRIOR TO THE PLACEMENT OF CONCRETE.

C2. THE FOOTING DETAILS SHOWN ARE FOR THE SITE CLASSIFICATION STIPULATED. WHILE EVERY CARE HAS BEEN TAKEN TO VERIFY THAT THE INFORMATION SHOWN IS CORRECT, RESIDENTIAL ENGINEERING TAKES NO RESPONSIBILITY FOR VARIATIONS WHICH MAY OCCUR IN SITE CONDITIONS SUBSEQUENT TO CONSTRUCTION.

C3. IF THE SITE HAS BEEN THE SUBJECT OF A GEOTECHNICAL INVESTIGATION REQUIRING ADHERENCE TO PARTICULAR CONSTRUCTION PROCEDURES AND/OR TECHNIQUES. THE REQUIREMENTS OF THE APPROPRIATE QUALIFIED GEOTECHNICAL ENGINEER'S REPORT SHALL BE COMPLIED WITH IN FULL.

ALL REFERENCE TO AUSTRALIAN STANDARDS AND B.C.A TO BE CURRENT EDITION.

IF IN DOUBT CONTACT ENGINEER.

SITE PREPARATION AND DRAINAGE

D1. STRIP TOPSOIL AND VEGETATION TO A 100mm MINIMUM DEPTH AND STOCKPILE.

D2. THE SITE IS TO BE BENCHED BY CUT AND FILL TO DESIRED LEVELS.

D3. ANY FILL USED IN THE CONSTRUCTION OF A SLAB EXCEPT WHERE THE SLAB IS SUSPENDED SHALL CONSIST OF "ROLLED OR CONTROLLED FILL".

D3A. ROLLED FILL SHALL BE PLACED IN LAYERS OF 150mm MAXIMUM IN ACCORDANCE WITH AS 2870 AND THOROUGHLY COMPACTED USING AN EXCAVATOR. UNLESS THIS FILL IS COMPACTED IN ACCORDANCE WITH AS 2870 IT IS NOT ADEQUATE FOR THE LONG TERM STRUCTURAL SUPPORT TO THE SLAB/FOOTING SYSTEM, THEREFORE PIERS MUST BE INSTALLED.

D3B. CONTROLLED FILL SHALL BE PLACED, TESTED AND CERTIFIED BY A QUALIFIED GEOTECHNICAL ENGINEER AS DEFINED IN AS 3798. THIS IS THEN DEEMED TO BE ADEQUATE TO SUPPORT THE SLAB/FOOTING SYSTEM.

D4. THE FILL IS TO EXTEND PAST THE EDGE OF THE SLAB BY AT LEAST ONE METRE AND SHALL BE BATTERED OFF NOT STEEPER THAN TWO HORIZONTALLY TO ONE VERTICAL OR RETAINED BY A SUITABLE STRUCTURE PROVIDED BY THE OWNER OR BUILDER AS SOON AS POSSIBLE.

D5. THE FINISHED LEVELS ABOVE THE ADJACENT GROUND SHALL ALLOW FOR THE MAIN SLAB TO BE AT LEAST:

D5A. STIFFENED RAFT: 150mm

D5B. WAFFLE RAFT: 300mm

D6. SURFACE DRAINAGE SHALL BE PROVIDED AS REQUIRED TO AVOID THE POSSIBILITY OF WATER PONDING NEAR THE SLAB. A FALL OF 50mm OVER A DISTANCE OF ONE METRE AWAY FROM THE SLAB IS CONSIDERED ADEQUATE. SUBSOIL DRAINS (AGRICULTURAL DRAINS) ARE CONSIDERED DESIRABLE BUT SHOULD BE AVOIDED BEING LOCATED DIRECTLY ADJACENT TO THE FOOTINGS.

D7. IF ANY FOOTING IS LOCATED SUCH THAT A LINE DRAWN AT 45° FOR CLAY AND 30° FOR SAND FROM ITS BASE INTERSECTS A SERVICE TRENCH THEN PIERS ARE REQUIRED, REFER SERVICE TRENCH DETAIL.

PIERS

P1. PIER DIAMETER AND LOCATIONS ARE SHOWN ON PLAN. ONLY WITH THE PRIOR APPROVAL OF THE ENGINEER MAY THE PIER DIAMETER BE VARIED AS PER THE "PIER DIAMETER TABLE".

P2. U.N.O MINIMUM PIER DEPTH IS 600mm BELOW FOOTING TRENCH AND WHEREVER NOMINATED SHOULD BE SOCKETED A MINIMUM 300mm INTO STIFF CLAY.

P3. ALL PIER HOLES SHALL BE CLEANED AND DE-WATERED PRIOR TO THE PLACEMENT OF CONCRETE.

P4. ALL PIERS SHALL BE POURED SEPARATE TO RAFT SLAB.

P5. IT SHOULD BE NOTED THAT IF ANY OF THE FOOTING BEAMS ENCOUNTER ROCK OR SHALE, THEN ALL BEAMS AND LOAD BEARING SPINE BEAMS SHALL BE PIERED TO ROCK OR SHALE. IF PARTIALLY PIERED TO ROCK THEN BRICK JOINTS ARE TO BE PROVIDED AT THE ROCK/NON-ROCK INTERFACE.

PIER DIAMETER TABLE

STRATA	MINIMUM BEARING CAPACITY 'kPa'	SINGLE STOREY	DOUBLE STOREY
STIFF CLAY	250	ø400 AT 2.0m CTS	ø450-2.0m CTS OR ø400-1.5m CTS
ROCK AND SHALE	600	ø400 AT 2.0m CTS	ø400-2.0m CTS
NATURAL SAND	150	REFER PLAN	REFER PLAN

FOOTING AND SLAB NOTES

F1. ALL WORKMANSHIP AND MATERIALS SHALL BE IN ACCORDANCE WITH AS 3600 AND AS 2870

F2. IT IS THE RESPONSIBILITY OF THE CONTRACTOR TO ENSURE PIER TOPS ARE CLEAN OF FOREIGN MATTER PRIOR TO THE PLACEMENT OF THE MEMBRANE AND CONCRETE SLAB. ENGINEER'S SPOT CHECK DOES NOT RELEASE THE CONTRACTOR FROM THIS RESPONSIBILITY.

F3. 50 THICK SAND LEVELLING LAYER:

F3A. STIFFENED RAFT: PLACE A NOMINAL 50 THICK SCREEDED SAND LEVELING LAYER. DROP PANELS IF REQUIRED ARE TO BE FORMED UP IN THE SAND SCREED.

F3B. WAFFLE RAFT: OPTIONAL

F4. SUBTERRANEAN TERMITE PROTECTION IS TO BE PROVIDED IN ACCORDANCE WITH THE REQUIREMENTS OF AS 3660.1

F5. A HIGH IMPACT RESISTANT DAMP PROOF MEMBRANE MUST BE PLACED BENEATH THE SLAB SO THAT THE BOTTOM OF THE SLAB IS ENTIRELY UNDERLAIN. THE DAMP PROOF MEMBRANE MUST BE 0.2mm NOMINAL THICKNESS POLYTHENE FILM AND OF HIGH IMPACT RESISTANCE. LAPS SHALL BE 200mm MINIMUM AT JOINTS. ALL PLUMBING PENETRATIONS AND JOINTS ARE TO BE TAPED AND MADE WATERPROOF. THE SITE IS TO BE PROPERLY DRAINED TO ELIMINATE SURFACE AND SUBSOIL WATER FLOW.

F6. ALL REINFORCEMENT SHALL BE FIRMLY SUPPORTED ON INSULATED STEEL, PLASTIC OR CONCRETE CHAIRS. BAR CHAIRS SHALL BE PLACED SUCH THAT REINFORCEMENT IS ALWAYS POSITIONED WITH SPECIFIED COVER

F7. IF TRENCH MESH IS USED REINFORCEMENT SHALL BE LAPPED 500 AT SPLICES AND PLACED ON CHAIRS TO GIVE SPECIFIED COVER. LAP REINFORCEMENT AT 'T' AND 'L' JUNCTIONS FULL WIDTH ACROSS THE JUNCTION.

F8. IF SLAB FABRIC IS USED IT IS TO BE SUPPLIED IN FLAT SHEETS AND IS TO BE LAPPED ONE FULL SQUARE PLUS 25mm AT SPLICES AND PLACED ON BAR CHAIRS AT ONE METRE CENTRES BOTH WAYS UNLESS REDUCED SPACING IS SPECIFIED.

F8A. STIFFENED RAFT: AT EACH DROP PANEL PLACE A 100mm CHAIR ON THE PIER TOP TO ENSURE ACCURATE FABRIC LOCATION.

F9. SPLICES IN REINFORCEMENT SHALL BE MADE ONLY IN THE POSITIONS SHOWN. THE WRITTEN APPROVAL OF THE ENGINEER SHALL BE OBTAINED FOR ANY OTHER SPLICES. WHERE LAP LENGTHS ARE NOT SHOWN THEY SHALL SATISFY THE REQUIREMENTS OF AS 3600.

F10. WELDING OF REINFORCEMENT OTHER THAN TACK WELDING FOR PURPOSE OF MAINTAINING BARS IN CORRECT POSITION IS NOT PERMITTED UNLESS SPECIFICALLY NOMINATED ON THE DRAWINGS OR AS DIRECTED BY THE ENGINEER.

F11. BEAM WIDTH:

F11A. STIFFENED RAFT: WHERE EXTERNAL BEAMS ARE WIDER THAN THAT SPECIFIED, AN EXTRA BOTTOM BAR OR EQUIVALENT OF THE SAME BAR SIZE IS REQUIRED FOR EACH 100mm ADDITIONAL WIDTH.

F11B. WAFFLE RAFT: REFER TO TABLE(S) TOTAL REINFORCEMENT REQUIREMENTS WITHIN FOOTING BEAMS AND STEM WIDTH REQUIREMENTS FOR DEEPENED BEAMS

F12. REINFORCEMENT IS REPRESENTED DIAGRAMMATICALLY ONLY, IT IS NOT NECESSARILY SHOWN IN TRUE PROJECTION.

F13. PIPE PENETRATIONS IN THE EDGE AND SPINE BEAMS ARE TO BE CARRIED OUT IN ACCORDANCE WITH THE DETAILS. WHERE SLAB FABRIC IS CUT TO PERMIT PENETRATIONS OF PIPES, A 600x600 PIECE OF FABRIC IS TO BE SPLICED OVER THE PENETRATION.

F14. FOR 'H' AND 'E' CLASS SITES - ALL PENETRATIONS THROUGH FOOTINGS AND EDGE BEAMS SHALL BE SLEAVED TO ALLOW MINIMUM 20mm ('H1' CLASS) AND 40mm ('H2' & 'E' CLASS) MOVEMENT AS PER AS 2870. ALL PLUMBING AND DRAINAGE SERVICES ARE TO BE FITTED WITH FLEXIBLE CONNECTIONS AS PER AS 2870.

F15. PIPES OR CONDUITS SHALL NOT BE PLACED WITHIN THE CONCRETE COVER TO REINFORCEMENT WITHOUT THE APPROVAL OF THE ENGINEER.

F16. BEAM DEPTHS ARE WRITTEN FIRST AND INCLUDE SLAB THICKNESS IF ANY. THICKNESS OF APPLIED FINISHES ARE NOT INCLUDED.

CONTROL OF PLASTIC SHRINKAGE AND SLAB MAINTENANCE

K1. WATER IS NOT TO BE ADDED TO THE CONCRETE ON SITE SO AS TO INCREASE THE SLUMP ABOVE THAT SPECIFIED.

K2. ALL CONCRETE SHALL BE MECHANICALLY VIBRATED. VIBRATORS SHALL NOT BE USED TO SPREAD CONCRETE.

K3. CURING THE CONCRETE SHALL START IMMEDIATELY AFTER FINISHING BY CONTINUALLY WETTING FOR 7 DAYS MINIMUM. PLASTIC OR WAX LIQUID SPRAYS MAY BE USED IN ACCORDANCE WITH THE MANUFACTURERS SPECIFICATIONS. EXTRA PRECAUTION SUCH AS THE METHOD OF EVAPORATIVE RETARDATION (THE USE OF ALIPHATIC ALCOHOLS) IS RECOMMENDED DURING HOT WEATHER POURS TO HELP AVOID THERMAL RELATED SLAB CRACKING.

K4. CONSTRUCTION JOINTS WHERE NOT SHOWN SHALL BE LOCATED TO THE APPROVAL OF THE ENGINEER.

K5. NO HOLES OR CHASES OTHER THAN THOSE SHOWN ON THE STRUCTURAL DRAWINGS SHALL BE MADE IN CONCRETE ELEMENTS WITHOUT THE PRIOR APPROVAL OF THE ENGINEER.

K6. CAUTION SHOULD BE EXERCISED WHEN APPLYING BRITTLE FINISHES SUCH AS CERAMIC TILES TO THE FLOOR SLAB. BRITTLE FLOOR COVERINGS ARE TO BE LAID ON A SUITABLE FLEXIBLE TYPE BEDDING SYSTEM AND SUPPLIED WITH CONTROL JOINTS AT 400mm CENTRES MAXIMUM. ALTERNATIVELY SL92 FABRIC CAN BE USED, AS/IF ADVISED BY THE BUILDER. ALTERNATIVELY FINISHES TO BE DELAYED FOR 3 MONTHS. REFER TO AS 2870 OR AS 3958.

K7. THE OWNERS ATTENTION SHALL BE DRAWN TO APPENDIX 'A' 'PERFORMANCE REQUIREMENTS AND FOUNDATION MAINTENANCE' OF AS 2870 AND CSIRO PUBLICATION 'GUIDE TO HOME OWNERS ON FOUNDATION MAINTENANCE AND FOOTING PERFORMANCE'.

REINFORCEMENT LAP TABLE

NOTE: BAR REINFORCEMENT IS TO BE TIED BENEATH THE FABRIC IF USED OR OTHERWISE PLACED ON BAR CHAIRS AND LAPPED AT SPLICES AS FOLLOWS:

BAR SIZE	N12	N16	N20	N24	N28	N32
LAP LENGTH	450	600	800	1200	1350	1650

REINFORCEMENT COVER TABLE

ELEMENT	SHELTERED AREAS			EXPOSED AREAS		
	TOP	BTM	SIDES	TOP	BTM	SIDES
SLAB	20	40	40	40	40	40
BEAMS	–	40	40	40	40	40
STRIP FOOTINGS	–	–	–	50	50	50
PIERS	–	–	50	–	–	50

NOTE: BEAMS AND SLAB IN THIS TABLE ARE CONSIDERED TO HAVE AN INTACT MEMBRANE IN CONTACT WITH THE GROUND. BEAMS AND SLABS POURED DIRECTLY AGAINST THE GROUND ARE TO HAVE 50mm CLEAR COVER ALL-ROUND

STRIP FOOTING NOTES

FN1. STRIP FOOTINGS SHALL BEAR ON FIRM UNIFORM NATURAL STRATA WITH A SAFE/MINIMUM BEARING CAPACITY AS PER THE PIER DIAMETER TABLE

FN2. MASS CONCRETE PIERS MAY BE REQ'D: REFER PIER NOTES AND THE PIER SPECIFICATION.

FN3. UNO CONCRETE TO BE STRENGTH N20 WITH A 20mm MAXIMUM AGGREGATE SIZE AND 100mm SLUMP.

NOTES REGARDING SUB-TERRANEAN TERMITE PROTECTION

T1. ALL WORKS TO BE IN ACCORDANCE WITH AS 3660.1

T2. ANY FUTURE CRACKING OCCURRING IN THE SLAB/FOOTING SYSTEM IS TO BE ASSESSED BY A QUALIFIED PEST EXPERT AND WHERE DIRECTED BE SEALED BY EPOXY INJECTION.

T3. INSPECTIONS OF THE RESIDENCE AND IMMEDIATE SURROUNDS TO BE CARRIED OUT BY A QUALIFIED PEST EXPERT ON AN ANNUAL BASIS BY THE HOME OWNER.

T4. SITE MAINTENANCE IS THE RESPONSIBILITY OF THE HOME OWNER. ALL RECOMMENDATIONS OUTLINED BY THE CSIRO SHEET 10-91 SHOULD BE CARRIED OUT.

MASONRY NOTES

M1. LOAD BEARING MASONRY SHALL COMPLY WITH AS 3700

M2. MASONRY AND MORTAR DURABILITY SHALL COMPLY WITH THE B.C.A CLASS 1 AND 10 BUILDINGS VOLUME 2.

M3. MASONRY SHALL BE ARTICULATED IN ACCORDANCE WITH THE B.C.A CLASS 1 AND 10 BUILDINGS VOLUME 2.

M4. INTERNAL BRICKWORK BUILT OFF THE SLAB SHALL BE LAID ON TWO LAYERS OF 'ALCOR' OR '3 PLY MALTHOID' OR SIMILAR SLIP JOINT MATERIAL.

M5. MASONRY WALLS MUST NOT BE BUILT ON CONCRETE SLABS OR BEAMS UNTIL ALL FORMWORK/PROPS SUPPORTING THESE SLABS AND BEAMS HAVE BEEN REMOVED.

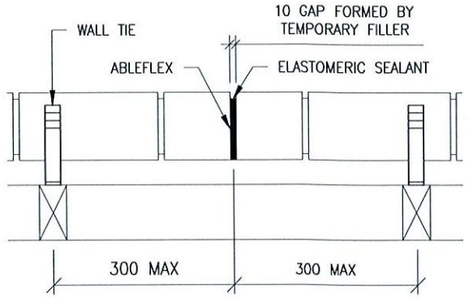

ARTICULATION JOINT AND WALL TIE DETAIL

ALL WALL TIES TO BE BUILT IN AND FIXED TO FRAME PROGRESSIVELY AS CONSTRUCTION PROCEEDS SPACED AT EACH SIDE OF EXPANSION JOINTS AND AT EACH THIRD COURSE. THE SPACING OF ALL OTHER TIES SHALL BE AS DESCRIBED IN THE B.C.A CLASS 1 AND 10 BUILDINGS HOUSING PROVISIONS VOLUME 2.

WIND/WALL TIE CLASSIFICATION

WIND		WALL TIE (DUTY)	HORIZONTAL SPACING	VERTICAL SPACING
CLASS	(Vp)			
N1	W28N1	LIGHT	600mm	600mm
N2	W33N2	MEDIUM	600mm	600mm
N3	W41N3	MEDIUM	600mm	430mm (5 COURSES)

NOTE:
- WALL TIE SPACINGS AROUND OPENINGS 300cts EW.
- POLYMER WALL TIES RATED "LIGHT DUTY ONLY" (W28N1).
- (Vp = PERMISSABLE STRESS METHOD).

This forms part of the approved Certificate as issued by Fitzgerald Building Certifiers Pty Limited

DRAWN	DATE	AMENDMENT	REV

CLIENT: RAWSON HOMES
UNIT 34/11-21 UNDERWOOD ROAD
HOMEBUSH NSW 2140
TELEPHONE 02 9764 6442
FAX 02 9764 6992
Builder's License No.33493C

FOR: MR & MRS HART

SITE ADDRESS: LOT 17 (178) WYADRA AVENUE, NORTH MANLY

RESIDENTIAL ENGINEERING
CONSULTING ENGINEERS
NSW: BPB 0255
VIC: EC 24609
QLD: RPEQ 4109
1/19 Jonathan Street, Greystanes NSW 2145 T: 02 9896 5494 F: 02 9636 1064
3/256 Argyle Street, Moss Vale NSW 2577 T: 02 4869 5003 F: 02 4869 5008
www.residentialengineering.com.au enquiries@residentialengineering.com.au

APPROVED BY: A.W. McCARTHY
B.Sc.(Eng), M.I.E.Aust, N.P.E.R., C.P.Eng.
NSW: BPB 0255
VIC: EC 24609
QLD: RPEQ 4109

JOB No. RW391
REVISION
DATE: 12/08/11
SCALE:
SHEET No. 2/9
CLIENT REF:
DRAWN: C.O.

COPYRIGHT: THIS DRAWING REMAINS THE PROPERTY OF RESIDENTIAL ENGINEERING AND MAY NOT BE ALTERED IN ANY WAY WITHOUT RESIDENTIAL ENGINEERING WRITTEN CONSENT.

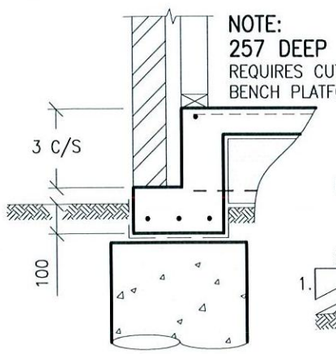

ALTERNATE 3 C/S EDGE BEAM

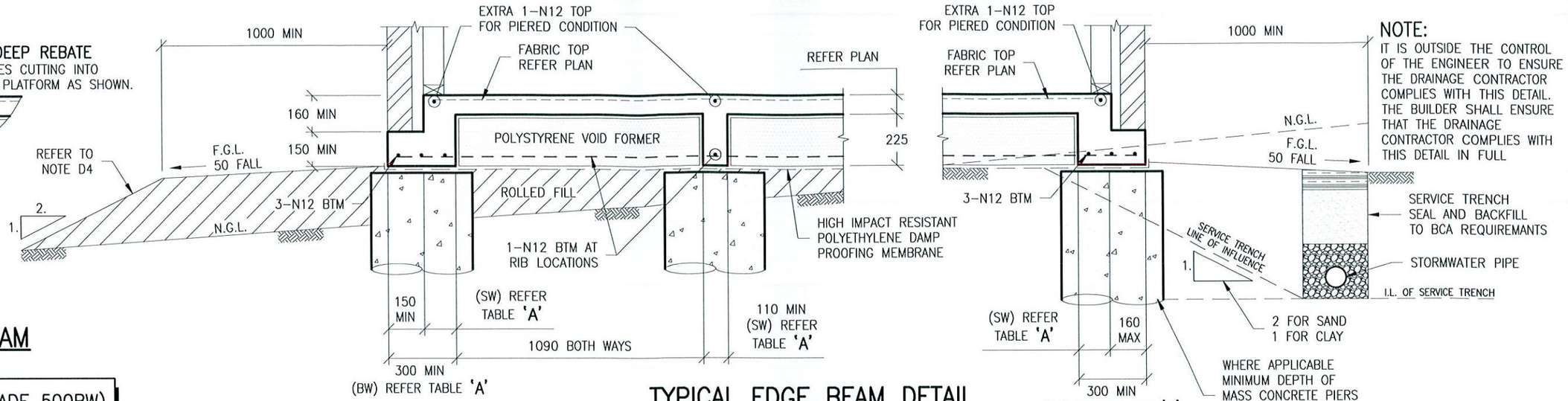

NOTE:
IT IS OUTSIDE THE CONTROL OF THE ENGINEER TO ENSURE THE DRAINAGE CONTRACTOR COMPLIES WITH THIS DETAIL. THE BUILDER SHALL ENSURE THAT THE DRAINAGE CONTRACTOR COMPLIES WITH THIS DETAIL IN FULL

TYPICAL EDGE BEAM DETAIL

MASS CONCRETE PIERS MAY BE OMITTED WHERE THE SLAB IS ON CONTROLLED FILL PLACED, TESTED AND CERTIFIED BY A QUALIFIED GEOTECHNICAL ENGINEER

RW11(RIBBED WIRE GRADE 500RW) MAY BE USED IN LIEU OF N12'S

TABLE 'A'

TOTAL REINFORCEMENT REQUIREMENTS WITHIN FOOTING BEAMS. FIGURE 3.4 AS 2870

BEAM WIDTH (BW)	TOTAL BTM STEEL
110 TO 150	1–N12
151 TO 220	2–N12
221 TO 330	3–N12
331 TO 440	4–N12
STEM WIDTH (SW)	ADDITIONAL TOP STEEL IN ADDITION TO SLAB FABRIC
110 TO 150	NIL
151 TO 220	1–N12
221 TO 330	2–N12
331 TO 440	3–N12

TABLE 'B'

STEM WIDTH REQUIREMENTS FOR DEEPENED BEAMS

MAX HEIGHT (H)	STEM WIDTH (SW)
UP TO 1200	150
1201 TO 1600	200
1601 TO 2000	250

TABLE 'C'

STEM WIDTH REINFORCEMENT FOR DEEPENED BEAMS

MAX HEIGHT (H)	'H' BARS	'V' BARS
85–257	NIL	NIL
258–350	NIL	R10–900
351–1200	N12–300	N12–300
1201–1600	N12–300	N12–200
1601–2000	N12–300	N16–300

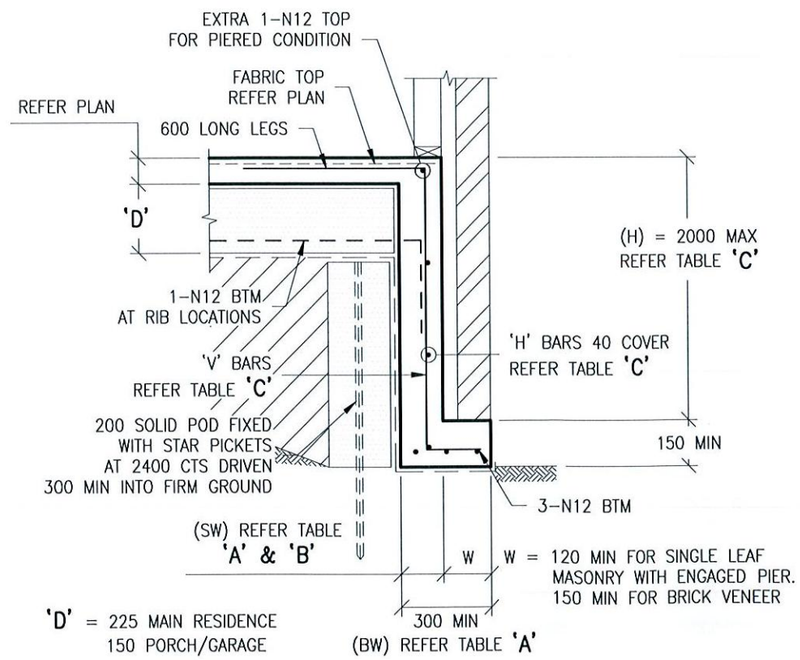

TYPICAL DEEPENED EDGE BEAM DETAIL

THE FULL EXTENT OF DEEPENED EDGE BEAMS TO BE CARRIED OUT IN ACCORDANCE WITH ARCHITECTURAL

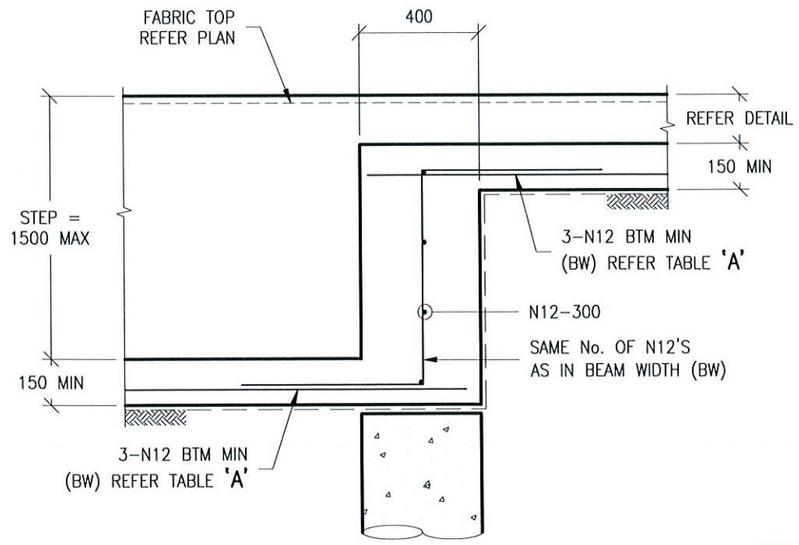

TYPICAL DEEPENED EDGE BEAM TRANSITION DETAIL (ELEVATION)

This plan forms part of the approved Certificate as issued by Fitzgerald Building Certifiers Pty Limited

IF IN DOUBT, CONTACT ENGINEER.

DRAWN	DATE	AMENDMENT	REV

CLIENT: RAWSON HOMES
UNIT 34/11–21 UNDERWOOD ROAD
HOMEBUSH NSW 2140
TELEPHONE 02 9764 6442
FAX 02 9764 6992
Builder's License No.33493C

FOR: MR & MRS HART

SITE ADDRESS: LOT 17 (178) WYADRA AVENUE, NORTH MANLY

RESIDENTIAL ENGINEERING
CONSULTING ENGINEERS
NSW: BPB 0255
VIC: EC 24609
QLD: RPEQ 4109
1/19 Jonathan Street, Greystanes NSW 2145 T: 02 9896 5494 F: 02 9636 1064
3/256 Argyle Street, Moss Vale NSW 2577 T: 02 4869 5003 F: 02 4869 5008
www.residentialengineering.com.au enquiries@residentialengineering.com.au

APPROVED BY: A.W. McCARTHY
B.Sc.(Eng), M.I.E.Aust, N.P.E.R., C.P.Eng.
NSW: BPB 0255
VIC: EC 24609
QLD: RPEQ 4109

JOB No. RW391
REVISION
DATE: 12/08/11
SCALE: 1:20
SHEET No. 3/9
CLIENT REF:
DRAWN: C.O.

COPYRIGHT: THIS DRAWING REMAINS THE PROPERTY OF RESIDENTIAL ENGINEERING AND MAY NOT BE ALTERED IN ANY WAY WITHOUT RESIDENTIAL ENGINEERING WRITTEN CONSENT.

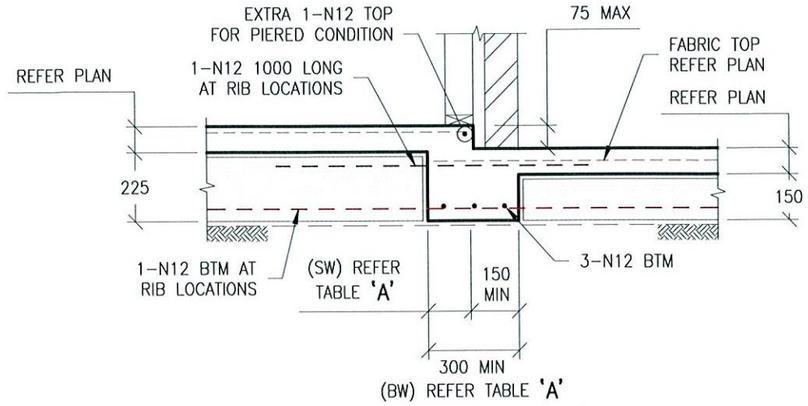

TYPICAL PORCH STEP BEAM DETAIL

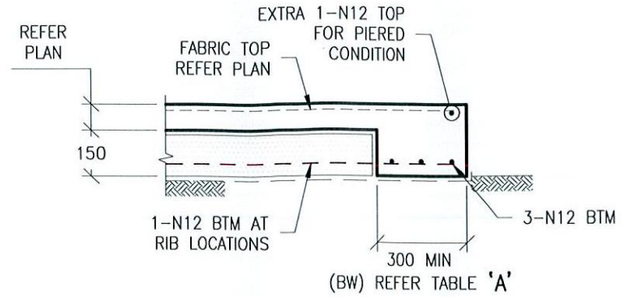

TYPICAL PORCH EDGE BEAM DETAIL

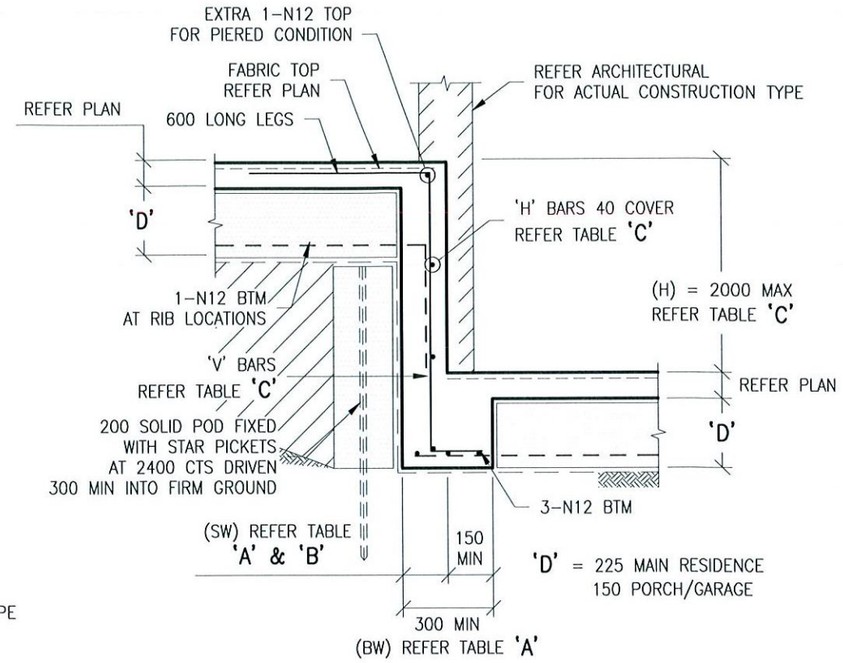

TYPICAL DEEPENED STEP BEAM DETAIL

THE FULL EXTENT OF DEEPENED STEP BEAMS TO BE CARRIED OUT IN ACCORDANCE WITH ARCHITECTURAL

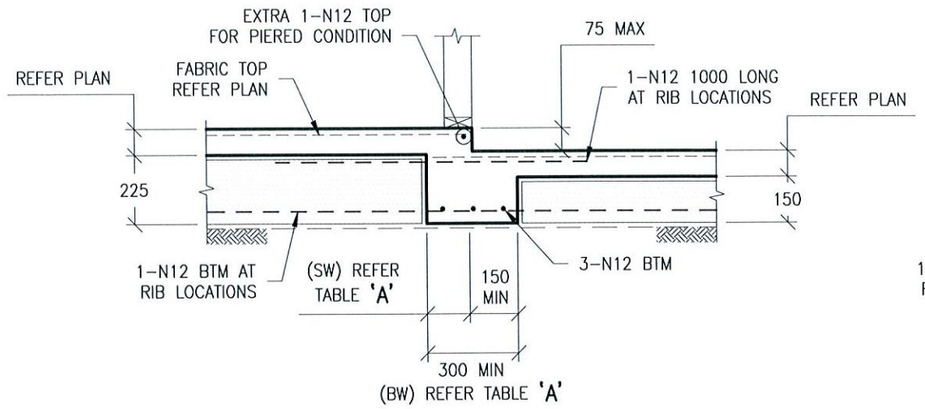

TYPICAL GARAGE STEP BEAM DETAIL

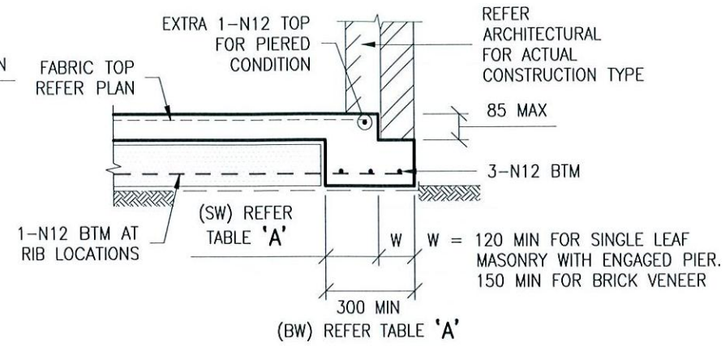

TYPICAL GARAGE EDGE BEAM DETAIL

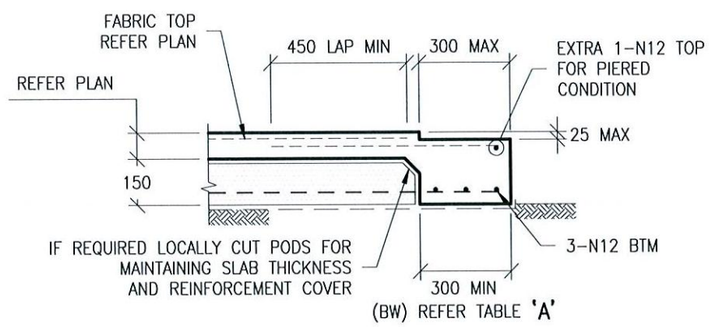

TYPICAL GARAGE DOOR REBATE DETAIL

NOTE:

- GARAGE DOOR REBATE SHOWN IS DIAGRAMMATIC ONLY AND SHALL BE READ IN CONJUNCTION WITH THE ARCHITECTURAL FOR ACTUAL REBATE DEPTH x WIDTH.
- IF REQUIRED PROVIDE 10mm FALL FROM BACK OF GARAGE TO GARAGE DOOR OPENING

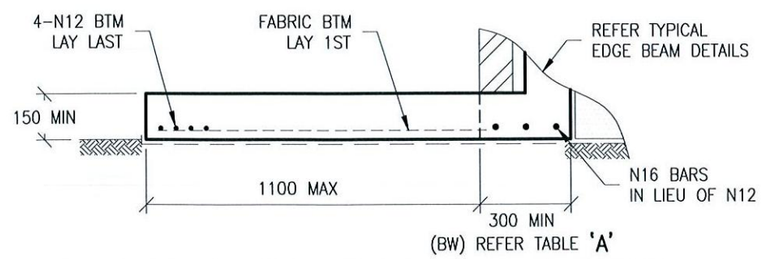

TYPICAL RAINWATER TANK SLAB DETAIL

THIS DETAIL IS APPLICABLE AT ALL TYPICAL EDGE BEAMS.
CONSTRUCTION TYPE MAY VARY FROM SHOWN

This plan forms part of the approved Certificate as issued by Fitzgerald Building Certifiers Pty Limited

IF IN DOUBT, CONTACT ENGINEER.

DRAWN	DATE	AMENDMENT	REV

CLIENT: RAWSON HOMES
UNIT 34/11-21 UNDERWOOD ROAD
HOMEBUSH NSW 2140
TELEPHONE 02 9764 6442
FAX 02 9764 6992
Builder's License No.33493C

FOR: MR & MRS HART

SITE ADDRESS: LOT 17 (178) WYADRA AVENUE, NORTH MANLY

RESIDENTIAL ENGINEERING
CONSULTING ENGINEERS
NSW: BPB 0255
VIC: EC 24609
QLD: RPEQ 4109
1/19 Jonathan Street, Greystanes NSW 2145 T: 02 9896 5494 F: 02 9636 1064
3/256 Argyle Street, Moss Vale NSW 2577 T: 02 4869 5003 F: 02 4869 5008
www.residentialengineering.com.au enquiries@residentialengineering.com.au

APPROVED BY: A.W. McCARTHY
B.Sc.(Eng), M.I.E.Aust, N.P.E.R., C.P.Eng.
NSW: BPB 0255
VIC: EC 24609
QLD: RPEQ 4109

JOB No. RW391
REVISION
DATE: 12/08/11
SCALE: 1:20
CLIENT REF:
DRAWN: C.O.
SHEET No. 4/9

COPYRIGHT: THIS DRAWING REMAINS THE PROPERTY OF RESIDENTIAL ENGINEERING AND MAY NOT BE ALTERED IN ANY WAY WITHOUT RESIDENTIAL ENGINEERING WRITTEN CONSENT.

IF IN DOUBT, CONTACT ENGINEER.

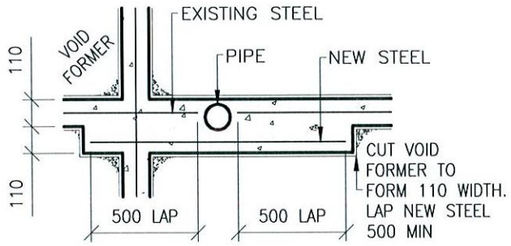

PLAN ON PIPE PENETRATION THROUGH RIB (PLAN VIEW)

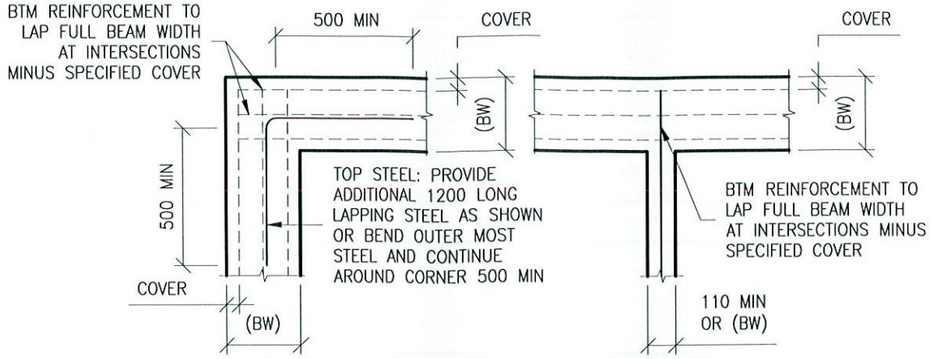

REINFORCEMENT LAPPING DETAIL AT 'L' AND 'T' INTERSECTIONS (PLAN VIEW)

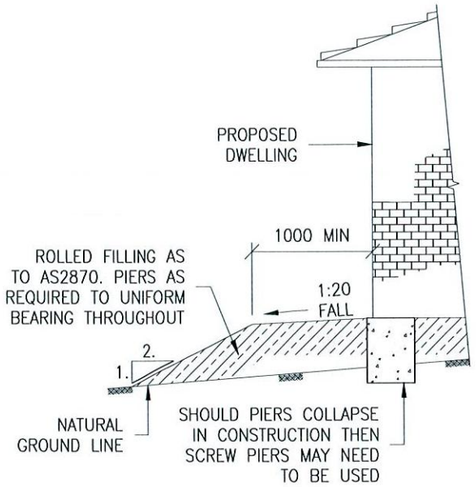

FILLING SPECIFICATION DETAIL

NOT TO SCALE

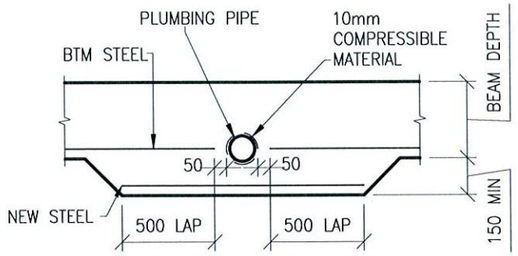

PIPE PENETRATION THROUGH BEAM (ELEVATION)

REFER BEAM WIDTH TABLE FOR No. OF NEW STEEL

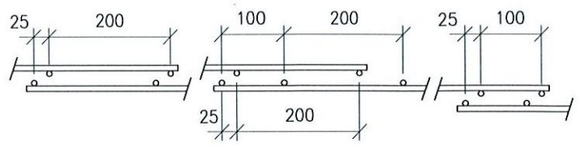

FABRIC LAP DETAIL

SCALE 1:10

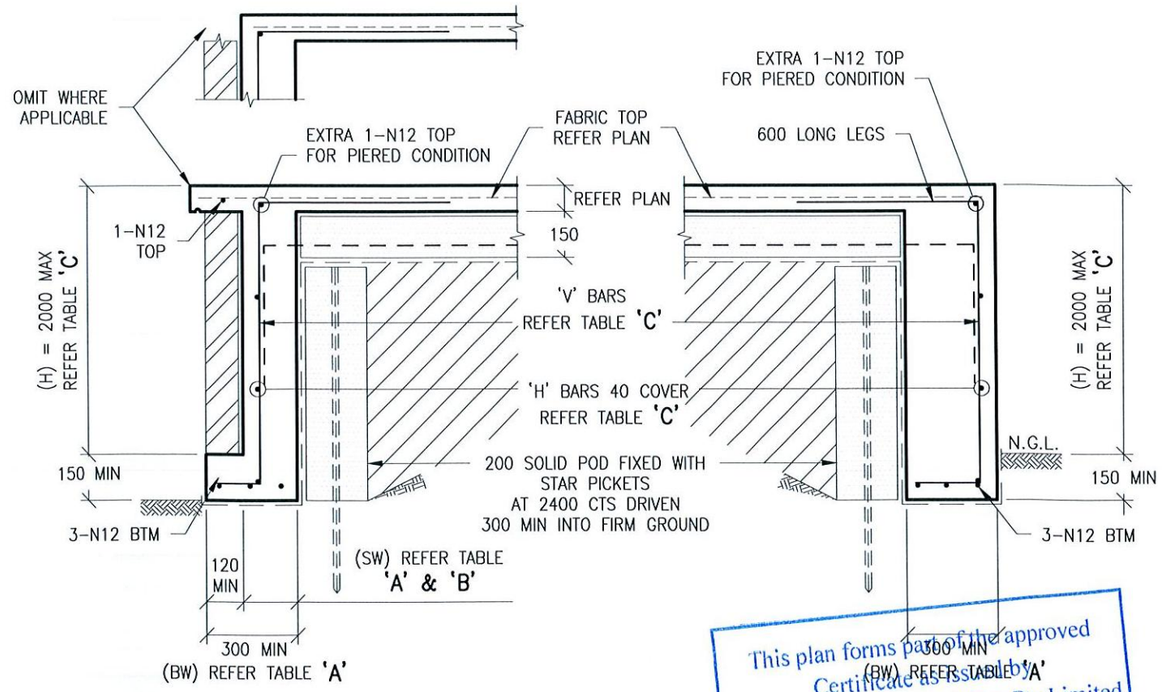

TYPICAL ALTERNATE DEEPENED PATIO EDGE BEAM DETAILS

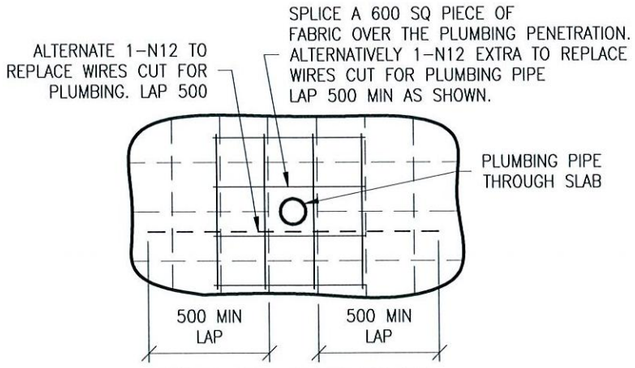

PIPE PENETRATION THROUGH SLAB (PLAN VIEW)

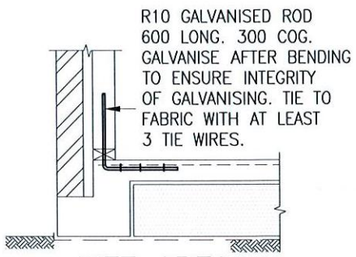

WET AREA EARTHING DETAIL

This plan forms part of the approved Certificate as Issued by Engineered Building Certifiers Pty Limited

DRAWN	DATE	AMENDMENT	REV

CLIENT: RAWSON HOMES
UNIT 34/11-21 UNDERWOOD ROAD
HOMEBUSH NSW 2140
TELEPHONE 02 9764 6442
FAX 02 9764 6992
Builder's License No.33493C

FOR: MR & MRS HART

SITE ADDRESS: LOT 17 (178) WYADRA AVENUE, NORTH MANLY

RESIDENTIAL ENGINEERING
CONSULTING ENGINEERS
NSW: BPB 0255
VIC: EC 24609
QLD: RPEQ 4109
1/19 Jonathan Street, Greystanes NSW 2145 T: 02 9896 5494 F: 02 9636 1064
3/256 Argyle Street, Moss Vale NSW 2577 T: 02 4869 5003 F: 02 4869 5008
www.residentialengineering.com.au enquiries@residentialengineering.com.au

APPROVED BY: A.W. McCarthy
A.W. McCARTHY
B.Sc.(Eng), M.I.E.Aust, N.P.E.R., C.P.Eng.
NSW: BPB 0255
VIC: EC 24609
QLD: RPEQ 4109

JOB No. RW391
REVISION
DATE: 12/08/11
SCALE: 1:20
SHEET No. 5/9
CLIENT REF:
DRAWN: C.O.

COPYRIGHT: THIS DRAWING REMAINS THE PROPERTY OF RESIDENTIAL ENGINEERING AND MAY NOT BE ALTERED IN ANY WAY WITHOUT RESIDENTIAL ENGINEERING WRITTEN CONSENT.

STEEL BEAM PROFILE NOTE:

THE BEAM(S) SPECIFIED ON THIS DRAWING DOES NOT REPRESENT THE ONLY POSSIBLE STRUCTURAL SOLUTION. PLEASE CONTACT RESIDENTIAL ENGINEERING IF AN ALTERNATIVE BEAM PROFILE WOULD BE PREFERRED FOR ARCHITECTURAL OR CONSTRUCTABILITY REASONS.

BEAM LOADS ALERT: (B3)

LOWER ROOF FRAMING SHALL BE SUPPORTED BY TIMBER TRUSSES TO ENSURE LOADS ARE NOT TRANSFERRED TO BEAM B3

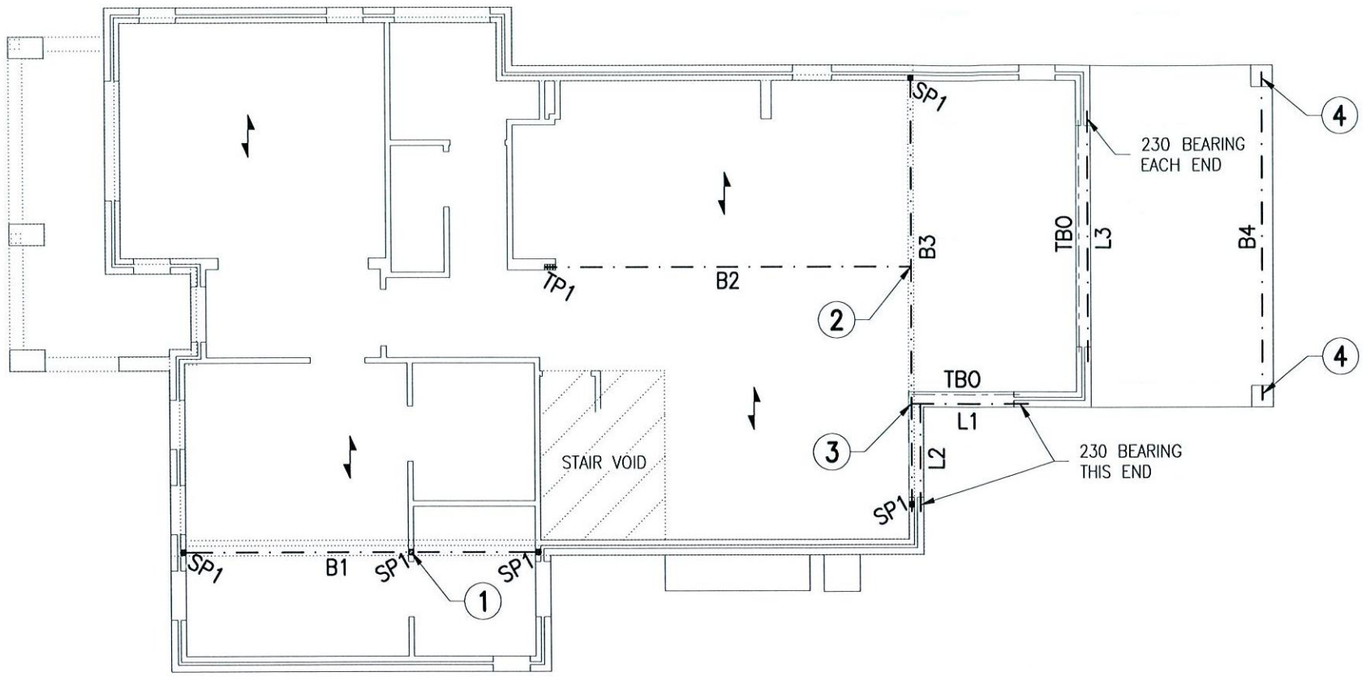

STEELWORK DESIGN MARKING DRAWING

FLOOR JOIST DIRECTION OVER BY BUILDER

MEMBER SCHEDULE

ITEM	DESCRIPTION
B1	250UB25
B2	310UB32
B3	380 PFC
B4	200 PFC
L1	150 x 100 x 10 RSA – BRICKWORK ONLY
L2	150 x 100 x 10 RSA – BRICKWORK ONLY
L3	150 x 100 x 10 RSA + 130 x 10 MS PL – BWK ONLY
SP1	75 x 75 x 4.0 SHS
TP1	4 / 90 x 45 MGP10 STUDS
TBO	TIMBER BEAM BY OTHERS

This plan forms part of the approved Certificate as issued by Fitzgerald Building Certifiers Pty Limited

IF IN DOUBT, CONTACT ENGINEER.

DRAWN	DATE	AMENDMENT	REV

CLIENT: RAWSON HOMES
UNIT 34/11-21 UNDERWOOD ROAD
HOMEBUSH NSW 2140
TELEPHONE 02 9764 6442
FAX 02 9764 6992
Builder's License No.33493C

FOR: MR & MRS HART

SITE ADDRESS: LOT 17 (178) WYADRA AVENUE, NORTH MANLY

RESIDENTIAL ENGINEERING
CONSULTING ENGINEERS
NSW: BPB 0255
VIC: EC 24609
QLD: RPEQ 4109
1/19 Jonathan Street, Greystanes NSW 2145 T: 02 9896 5494 F: 02 9636 1064
3/256 Argyle Street, Moss Vale NSW 2577 T: 02 4869 5003 F: 02 4869 5008
www.residentialengineering.com.au enquiries@residentialengineering.com.au

APPROVED BY:
A.W. McCARTHY
B.Sc.(Eng), M.I.E.Aust, N.P.E.R., C.P.Eng.
NSW: BPB 0255
VIC: EC 24609
QLD: RPEQ 4109

JOB No. RW391
REVISION
DATE: 12/08/11
SCALE: 1:100
SHEET No. 6/9
CLIENT REF:
DRAWN: C.O.

COPYRIGHT: THIS DRAWING REMAINS THE PROPERTY OF RESIDENTIAL ENGINEERING AND MAY NOT BE ALTERED IN ANY WAY WITHOUT RESIDENTIAL ENGINEERING WRITTEN CONSENT.

IF IN DOUBT, CONTACT ENGINEER.

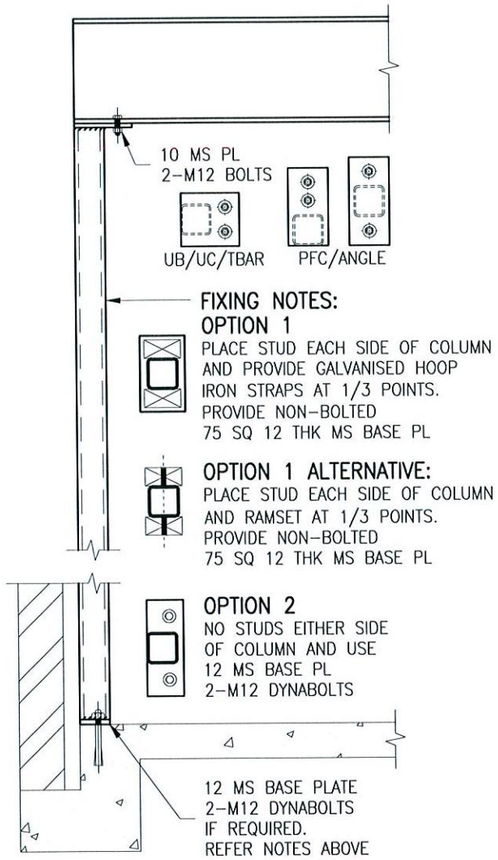

TYPICAL STEEL POST DETAIL

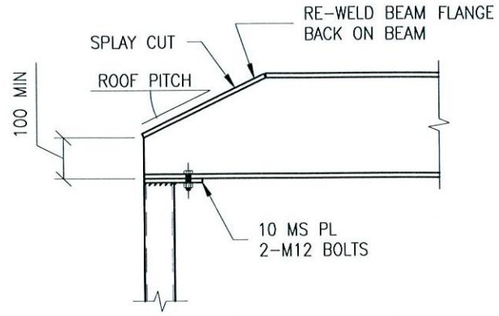

TYPICAL SPLAY DETAIL

NOTE: THE BUILDER IS TO DETERMINE IF THIS DETAIL IS REQUIRED

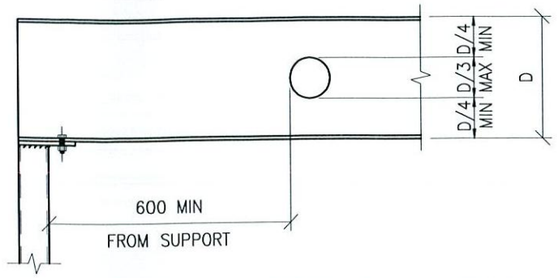

STEEL BEAM PENETRATION DETAIL

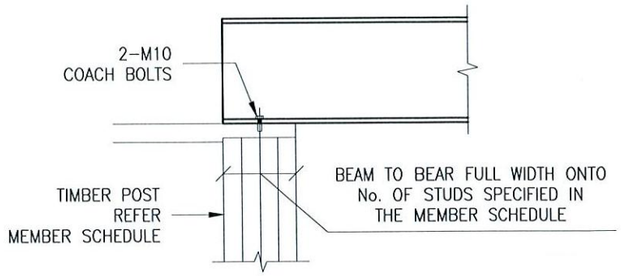

TYPICAL TIMBER POST DETAIL (SIDE ELEVATION)

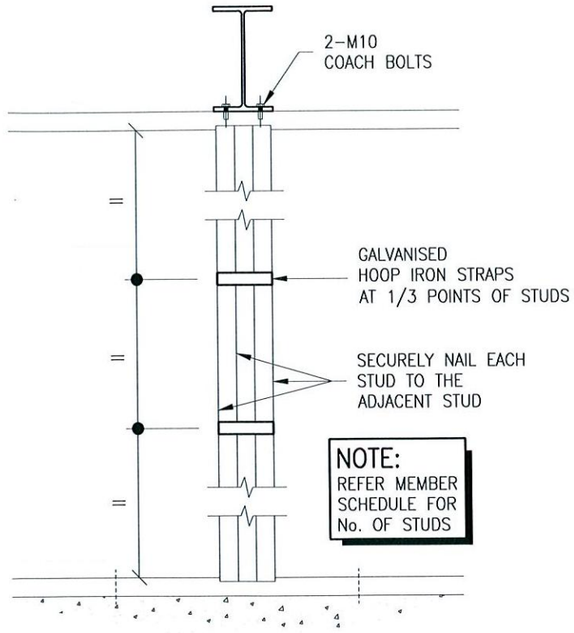

TYPICAL TIMBER POST DETAIL

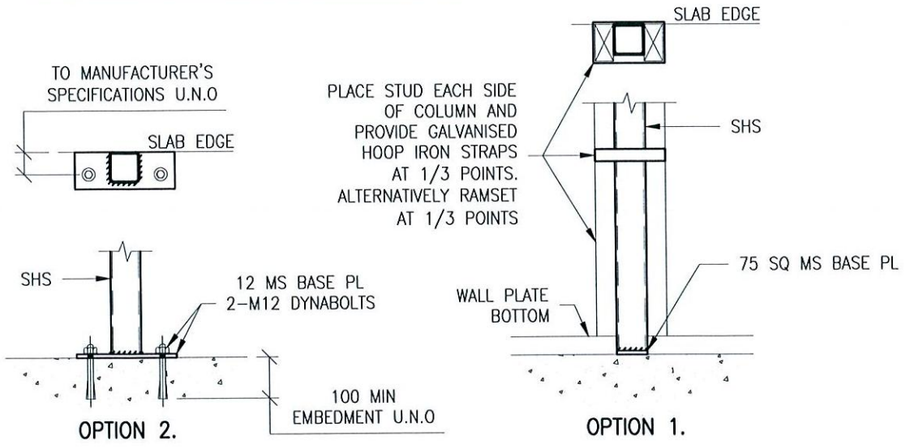

COLUMN BASE PLATE CONNECTION DETAILS

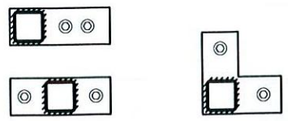

COLUMN BASE PLATE DETAILS

- ORIENTATE BASE PLATE TO SUIT WALL LOCATION
- 12mm THICK BASE PLATE U.N.O
- 2-M12 DYNABOLTS, 100 MIN EMBEDMENT U.N.O
- 6mm CFW CONNECTION OF COLUMN TO BASE PLATE

NOTE:
- ALL WELDS TO BE 6mm CFW U.N.O.
- ALL BOLTS TO BE SPANNER TIGHTENED

STRUCTURAL STEEL NOTES

S1. ALL WORKMANSHIP AND MATERIALS SHALL BE IN ACCORDANCE WITH AS 4100.

S2. STEELWORK DESIGNED IN ACCORDANCE WITH AS 4100 "STEEL STRUCTURES CODE" AND AS 1170.1/AS 1170.2 "DEAD AND LIVE LOADS AND WIND LOADS". STRUCTURAL STEEL TO BE GRADE (BHP 300 PLUS)

S3. SURFACE PREPARATION AND FINISH TO COMPLY WITH AS/NZS 2312 AND BUILDING CODE OF AUSTRALIA CLASS 1 AND 10 BUILDINGS VOLUME 2. THE BUILDER MUST CLARIFY HIS CONTRACTUAL OBLIGATIONS IN THIS REGARD.

S4. THE INSTALLATION OF GALINTELS AND 'T' BARS TO BE STRICTLY IN ACCORDANCE WITH MANUFACTURERS SPECIFICATIONS.

S5. THE STABILITY OF THE STRUCTURE DURING CONSTRUCTION IS THE BUILDERS RESPONSIBILITY. ADEQUATE TEMPORARY BRACING SHALL BE PROVIDED AS IS NECESSARY TO STABILISE THE STRUCTURE DURING CONSTRUCTION.

S6. WELDS:
- ALL WELDS TO BE 6mm CONTINUOUS FILLET WELD U.N.O.
- BUTT WELDS WHERE INDICATED IN THE DOCUMENTS TO BE COMPLETE PENETRATION BUTT WELDS AS DEFINED IN AS 1554.
- ALL SHOP WELDS TO BE FULLY WELDED U.N.O.
- USE E41XX ELECTRODES FOR ALL WELDING U.N.O.

S7. SITE WELDING OF HOT DIP GALVANISED STEEL IS PERMISSIBLE IF UPON COMPLETION THE WELDS ARE TREATED WITH THE APPROPRIATE COATING FOR SEVERE AS PER THE B.C.A AND AS/NZS 2312.

S8. BOLT DESIGNATION:
- 4.6/S – COMMERCIAL BOLT OF GRADE 4.6 TO AS 1111 SNUG TIGHTENED
- 8.8/S – HIGH STRENGTH STRUCTURAL BOLTS OF GRADE 8.8 TO AS 1252 SNUG TIGHTENED
- BOLTS TO BE PROVIDED WITH THREADS CLEAR OF SHEAR PLANE.

S9. ALL BOLTS TO BE COMMERCIAL GRADE U.N.O. NO CONNECTION SHALL HAVE LESS THAN TWO BOLTS. ALL BOLTS AND WASHERS TO BE GALVANISED.

S10. BEAMS SUPPORTED ON BRICKWORK (BEARING NOTED ON PLAN) TO HAVE INCOMPRESSIBLE PACKING AS REQUIRED UNDER THE ENDS OF THE BEAM TO ENSURE EVEN BEARING ON THE BRICKWORK.

S11. THE BUILDER SHALL PROVIDE ALL CLEATS AND DRILL ALL HOLES NECESSARY FOR FIXING STEEL TO STEEL AND TIMBER TO STEEL, WHETHER OR NOT DETAILED IN THE DRAWINGS.

S12. ALL GUSSET PLATES TO BE 10mm THICK U.N.O.

S13. ALL COLUMNS AND BEAMS SHOWN ON THE DRAWINGS FOR TIMBER FRAMED BUILDINGS SHALL BE LATERALLY RESTRAINED BY THE BUILDING FRAME AT EACH SUPPORT LOCATION THROUGH POSITIVE SCREW FIXING OF WALL STUDS TO THE COLUMNS AND EITHER JOISTS OR NOGGINGS TO THE BEAMS. FOR ARTICULATED FULL MASONRY BUILDINGS, COLUMNS WILL BE LATERALLY RESTRAINED BY BRICKWORK AT EACH SUPPORT LOCATION THROUGH POSITIVE FIXING OF WALL TIES. WHERE A BEAM DIRECTLY SUPPORTS A CONCRETE SLAB NO ADDITIONAL RESTRAINT IS REQUIRED.

S14. THE BUILDER IS TO MAKE GOOD AND/OR REPAIR ALL DAMAGED SURFACES DURING PERFORMANCE OF THE WORK.

This plan forms part of the approved Certificate issued by Fitzgerald Building Certifiers Pty Limited

DRAWN	DATE	AMENDMENT	REV

CLIENT: RAWSON HOMES
UNIT 34/11-21 UNDERWOOD ROAD
HOMEBUSH NSW 2140
TELEPHONE 02 9764 6442
FAX 02 9764 6992
Builder's License No.33493C

FOR: MR & MRS HART

SITE ADDRESS: LOT 17 (178) WYADRA AVENUE, NORTH MANLY

RESIDENTIAL ENGINEERING
CONSULTING ENGINEERS
NSW: BPB 0255
VIC: EC 24609
QLD: RPEQ 4109
1/19 Jonathan Street, Greystanes NSW 2145 T: 02 9896 5494 F: 02 9636 1064
3/256 Argyle Street, Moss Vale NSW 2577 T: 02 4869 5003 F: 02 4869 5008
www.residentialengineering.com.au enquiries@residentialengineering.com.au

APPROVED BY: A.W. McCARTHY
B.Sc.(Eng), M.I.E.Aust, N.P.E.R., C.P.Eng.
NSW: BPB 0255
VIC: EC 24609
QLD: RPEQ 4109

JOB No. RW391
REVISION
DATE: 12/08/11
SCALE: 1:15
SHEET No. 7/9
CLIENT REF:
DRAWN: C.O.

COPYRIGHT: THIS DRAWING REMAINS THE PROPERTY OF RESIDENTIAL ENGINEERING AND MAY NOT BE ALTERED IN ANY WAY WITHOUT RESIDENTIAL ENGINEERING WRITTEN CONSENT.

IF IN DOUBT, CONTACT ENGINEER.

ALL STEEL BEAM CROSS SECTIONS ARE DIAGRAMMATIC ONLY

- REFER TO THE MANUFACTURERS SPECIFICATIONS FOR INSTALLATION DETAILS OF I–JOISTS, LVL'S AND ROOF TRUSSES WHERE APPLICABLE.
- SOLID TIMBER JOISTS SHALL NOT TO BE NOTCHED IN EXCESS OF THE RECOMMENDATIONS OF AS 1684.1. WHERE NECESSARY PROVIDE TIMBER PLATE OVER STEEL BEAM AND PROVIDE TOP MOUNT JOIST HANGERS. ALTERNATIVELY USE TIMBER BLOCKING BETWEEN FLANGES OF STEEL BEAM SUPPORTING JOISTS AND USE FACE MOUNTED JOIST HANGERS.

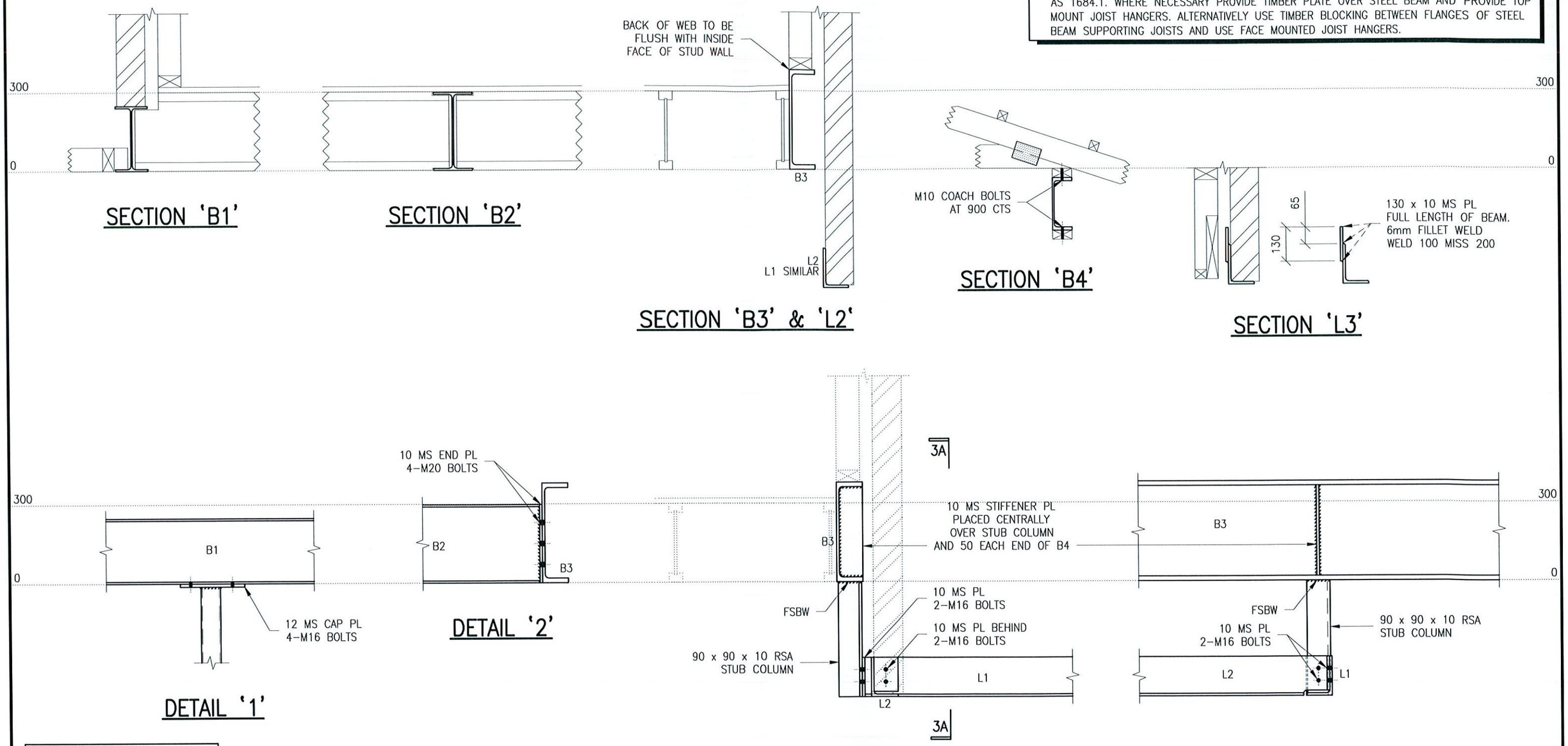

NOTE:

- ALL WELDS TO BE 6mm CFW U.N.O.
- ALL BOLTS TO BE SPANNER TIGHTENED

This plan forms part of the approved Certificate as issued by Fitzgerald Building Certifiers Pty Limited

DRAWN	DATE	AMENDMENT	REV

CLIENT: RAWSON HOMES
UNIT 34/11–21 UNDERWOOD ROAD
HOMEBUSH NSW 2140
TELEPHONE 02 9764 6442
FAX 02 9764 6992
Builder's License No.33493C

FOR: MR & MRS HART

SITE ADDRESS: LOT 17 (178) WYADRA AVENUE, NORTH MANLY

RESIDENTIAL ENGINEERING
CONSULTING ENGINEERS
NSW: BPB 0255
VIC: EC 24609
QLD: RPEQ 4109
1/19 Jonathan Street, Greystanes NSW 2145 T: 02 9896 5494 F: 02 9636 1064
3/256 Argyle Street, Moss Vale NSW 2577 T: 02 4869 5003 F: 02 4869 5008
www.residentialengineering.com.au enquiries@residentialengineering.com.au

APPROVED BY:
A.W. McCARTHY
B.Sc.(Eng), M.I.E.Aust, N.P.E.R., C.P.Eng.
NSW: BPB 0255
VIC: EC 24609
QLD: RPEQ 4109

JOB No. RW391
REVISION
DATE: 12/08/11
SCALE: 1:15
SHEET No. 8/9
CLIENT REF:
DRAWN: C.O.

COPYRIGHT: THIS DRAWING REMAINS THE PROPERTY OF RESIDENTIAL ENGINEERING AND MAY NOT BE ALTERED IN ANY WAY WITHOUT RESIDENTIAL ENGINEERING WRITTEN CONSENT.

IF IN DOUBT, CONTACT ENGINEER.

ALL STEEL BEAM CROSS SECTIONS ARE DIAGRAMMATIC ONLY

- REFER TO THE MANUFACTURERS SPECIFICATIONS FOR INSTALLATION DETAILS OF I–JOISTS, LVL'S AND ROOF TRUSSES WHERE APPLICABLE.
- SOLID TIMBER JOISTS SHALL NOT TO BE NOTCHED IN EXCESS OF THE RECOMMENDATIONS OF AS 1684.1. WHERE NECESSARY PROVIDE TIMBER PLATE OVER STEEL BEAM AND PROVIDE TOP MOUNT JOIST HANGERS. ALTERNATIVELY USE TIMBER BLOCKING BETWEEN FLANGES OF STEEL BEAM SUPPORTING JOISTS AND USE FACE MOUNTED JOIST HANGERS.

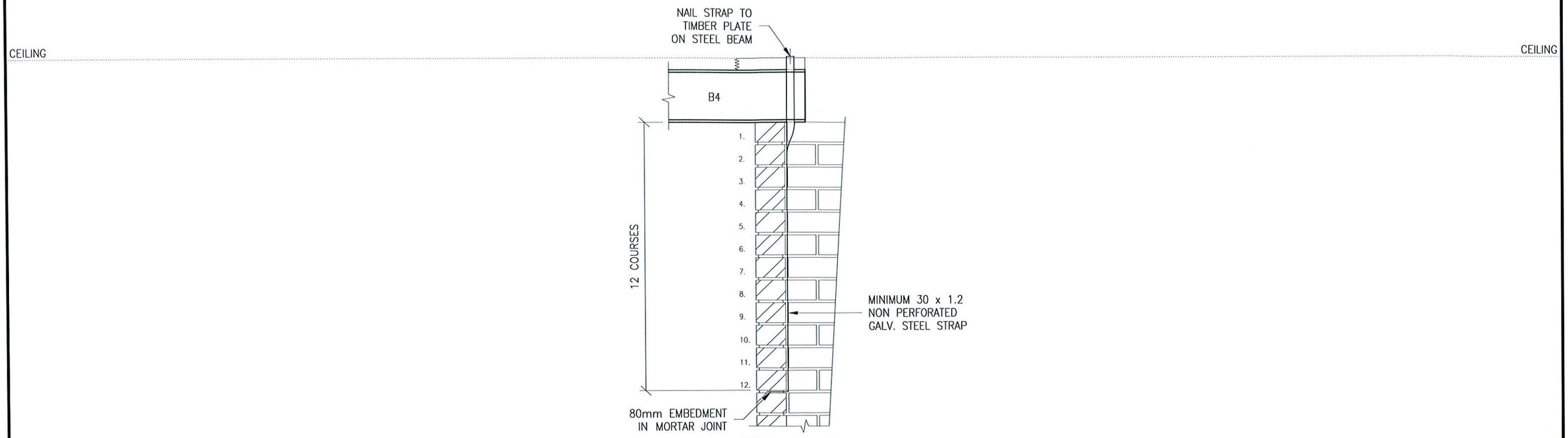

DETAIL '4'

NOTE:

- ALL WELDS TO BE 6mm CFW U.N.O.
- ALL BOLTS TO BE SPANNER TIGHTENED

This plan forms part of the approved Certificate as issued by Fitzgerald Building Certifiers Pty Limited

DRAWN	DATE	AMENDMENT	REV

CLIENT: RAWSON HOMES
UNIT 34/11–21 UNDERWOOD ROAD
HOMEBUSH NSW 2140
TELEPHONE 02 9764 6442
FAX 02 9764 6992
Builder's License No.33493C

FOR: MR & MRS HART

SITE ADDRESS: LOT 17 (178) WYADRA AVENUE, NORTH MANLY

RESIDENTIAL ENGINEERING
CONSULTING ENGINEERS
NSW: BPB 0255
VIC: EC 24609
QLD: RPEQ 4109
1/19 Jonathan Street, Greystanes NSW 2145 T: 02 9896 5494 F: 02 9636 1064
3/256 Argyle Street, Moss Vale NSW 2577 T: 02 4869 5003 F: 02 4869 5008
www.residentialengineering.com.au enquiries@residentialengineering.com.au

APPROVED BY:
A.W. McCARTHY
B.Sc.(Eng), M.I.E.Aust, N.P.E.R., C.P.Eng.
NSW: BPB 0255
VIC: EC 24609
QLD: RPEQ 4109

JOB No.	REVISION
RW391	
DATE: 12/08/11	SCALE: 1:15
CLIENT REF:	DRAWN: C.O.
SHEET No.	9/9

COPYRIGHT: THIS DRAWING REMAINS THE PROPERTY OF RESIDENTIAL ENGINEERING AND MAY NOT BE ALTERED IN ANY WAY WITHOUT RESIDENTIAL ENGINEERING WRITTEN CONSENT.