Pittwater

Construction Certificate

yours locally

LOCAL

CERTIFICATE NUMBER 5002360

Sydney North West
21/5 Inglewood Place
Baulkham Hills 2153
PO Box 7321 Baulkham Hills BC NSW 2153
DX 8461 Castle Hill
p 02 9836 5711 f 02 9836 5722
web www.localgroup.com.au

Issued under the Environmental Planning and Assessment Act, 1979

SUBJECT LAND	HNO	28
	LOT	22
	DP/SP/CP	7236
	HEATH STREET	
	MONA VALE 2103	
DEVELOPMENT CONSENT	N0212/08	
DATE OF CONSENT	13 JUNE, 2008	
DESCRIPTION OF WORK	DWELLING (TWO STOREY)	
LIMITATIONS &/OR EXCLUSIONS		
BUILDING CLASSIFICATION	1A	

COPY

SC
7 AUG 2008
PITTWATER COUNCIL

The application for this Construction Certificate has been determined as **APPROVED** in accordance with the procedures outlined in Clause 142 of the Environmental Planning and Assessment Regulation 2000 In making this determination, I certify that the work if completed in accordance with the documentation accompanying the application for the Certificate (with such modifications verified by the certifying authority as may be shown on that documentation) will comply with the requirements of this Regulation as referred to in Section 81A(5) of the Environmental Planning and Assessment Act, 1979, as amended

DOCUMENTATION ACCOMPANYING THE APPLICATION.

PLANS

PLANS PREPARED BY CLARENDON RESIDENTIAL GROUP, DATED 14/3/08, REVISION E DATED 13/5/08, JOB # 29903437, SHEETS 1-8

SPECIFICATIONS

GENERAL HOUSING SPECIFICATION PREPARED BY HIA

OTHER DOCUMENTS

APPLICATION FORM
OWNERS CONSENT
HOW CERTIFICATE
COUNCIL RECEIPTS
SYDNEY WATER APPROVAL
EXTERNAL COLOURS CHART
BASIX CERTIFICATE # 196579S, DATED 13/5/08
ABSA CERTIFICATE # 80670293, DATED 22/4/08
ENGINEER DETAILS PREPARED BY RAFELETOS ZANUTTINI, DATED 12/5/08, JOB # 29563CL, ISSUE A, SHEETS 1 4
SITE REPORT PREPARED BY RAFELETOS ZANUTTINI, DATED 6/2/08
STORMWATER LAYOUT PREPARED BY IBRAHIM STORMWATER CONSULTANTS, ISSUE 1 DATED 9/5/08, JOB # C1420-03437, SHEETS 1-2
CONTOUR PLAN PREPARED BY ASPECT DEVELOPMENT & SURVEY, DATED 20/2/08
LANDSCAPE CONCEPT PLAN PREPARED BY NICK MASON, DATED 31/3/08

R# 242713
5/8/08

FIRE SAFETY SCHEDULE ATTACHED ☐ YES ☒ N/A

Andrew Dean
BPB0087

30 July, 2008
Date of Certificate

☑ Debbie Foss ☐ Natasha Scerri
☐ Ray Marshall ☑ Janie Whata

RECEIVED
BY LOCAL CERTIFICATION SERVICES P/L
on, 17/6/08 (date)

LOCAL

APPLICATION FORM

☐ Principal Certifying Authority ~~☐ Complying Development Certificate~~ ~~☐ Compliance Certificate~~
☑ Construction Certificate ☑ Occupation Certificate

THE APPLICATION

DATE OF APPLICATION:

LAND TO BE DEVELOPED

Lot No.	22	**Deposited Plan**	7236
House No	28	**Street Name**	Heath Street
Suburb.	Mona Vale	**Post Code.**	
Area (m^2)	929		

26316

THE DEVELOPMENT

Proposed Building Work	Residential ☑ Commercial ☐ Industrial ☐
Description of Development	
Value of Work	$254,795
Type of work	Erection of a Building

CONSENTS

Consent Authority	PITTWATER		
Development Consent No	212/08	**Date of Issue**	13/6/08
Builder or Owner/Builder Name	CLARENDON		
Licence No	22980		

THE APPLICANT

Surname.	Callaghan
First Name	Wayne Victor Andrew & Deborah Susan
Street	C/-Clarendon Homes, Norwest Quay, Unit 2
Suburb	Ground Floor, 21 Solent Cct, Baulkham Hills 2153
Contact No's	8851 5300

THE OWNER/S

	Owner 1	Owner 2
First Name	Wayne Victor Andrew	Deborah Susan
Surname	Callaghan	Callaghan
Street	28 Heath Street	
Address	Mona Vale NSW 2103	
Contact No	9997 2877	
	27765	27766

LETTER OF CONSENT

OWNERS CONSENT

I/we the owners of the subject property hereby give consent for the lodgement all relevant applications (i e for Construction Certificate/s, Complying Development Certificate/s, Occupation Certificate/s, Compliance Certificate/s) and associated documentation to Local Certification Services Unit Trust for consideration

I/we also declare that all documentation presented as part of an application for a Construction Certificate has remained unaltered from that issued with any Development Consent or that any changes have been documented and Local Certification Services Unit Trust have been advised accordingly

In the event that the nominated Principal Certifying Authority resigns from his employment position with Local Certification Services Unit Trust my signature provided below will also serve as the authorisation for the transfer of the role and responsibilities of the Principal Certifying Authority from the nominated person to Mr Andrew Dean

PRINCIPAL CERTIFYING AUTHORITY

With reference to this proposed development I/we the owners of the subject property hereby advise of our decision to appoint ☐ Andrew Dean ☐ Callan Blackwell ☐ Craig Hardy ☐ Paul Morgan ☐ Michael Shanahan ☐ Paul Gearin ☐ Danial Powell ☑ Sam Pratt ☐ _____ *(please select by ticking the box)* to fulfil the role of Principal Certifying Authority (PCA) as outlined in the Environmental Planning and Assessment Act, 1979 (as amended)

I/we understand that this engagement shall be subject to the Terms and Conditions outlined in this application and the associated Schedule and I/we further understand that he will carry out all mandatory inspections required by the Act during the course of construction along with any others that he deems to be necessary and referred to the abovementioned Agreement

I/we also advise that I/we are aware of the conditions attached to any Development Consent (i e Local Development Consent or Complying Development Consent) and are aware of our responsibilities in relation to those conditions

SIGNATURES

APPLICANT			
Signed			
Name *(Please Print)*	**Mr Wayne Victor Andrew Callaghan & Mrs Deborah Susan Callaghan**	**Date**	

OWNER/S			
Signed			
Name *(Please Print)*	**Mr Wayne Victor Andrew Callaghan**	**Date**	
Signed			
Name *(Please Print)*	**Mrs Deborah Susan Callaghan**	**Date**	
Signed			
Name *(Please Print)*		**Date**	
Signed			
Name *(Please Print)*		**Date**	

LOCAL

AUSTRALIAN BUREAU OF STATISTICS

ALL NEW BUILDINGS *(Please complete the following)*

How many storeys (*incl underground floors*) will the proposed building consist of ? ☐1 ☑2 ☐___

What is the gross are of the new building ? _____ 401 68 m^2

What is the gross area of the site on which the proposal will be constructed ? ____ 929 m^2

RESIDENTIAL BUILDINGS ONLY *(Please complete the following for residential buildings)*

How many dwellings will be constructed ? _____ ☐0 ☑1 ☐2

How many pre-existing dwellings are there on the site already ? _____ ☐0 ☑1 ☐2

How many dwellings will be demolished ? _____ ☐0 ☑1 ☐2

If the proposal includes a new dwelling/s is it be attached to another new building ? ☐Yes ☑No

If the proposal includes a new dwelling/s is it be attached to another new building ? ☐Yes ☑No

Does the site contain a Dual Occupancy ?
(A dual occupancy is defined as two dwellings on the one site) _____ ☐Yes ☑No

MATERIALS
Please indicate the materials to be used in the construction of the new building/s

Walls		Code
Brick (Double)	_____	☐ 11
Brick (Veneer)	_____	☑ 12
Concrete or Stone	_____	☐ 20
Fibre Cement	_____	☐ 30
Timber	_____	☐ 40
Curtain (Glass)	_____	☐ 50
Steel	_____	☐ 60
Aluminium	_____	☐ 70
Other	_____	☐ 80
Not Specified	_____	☐ 90

Floor		Code
Concrete or Slate	_____	☑ 20
Timber	_____	☐ 40
Other	_____	☐ 80
Not Specified	_____	☐ 90

Roof		Code
Tiles	_____	☑ 10
Concrete or Slate	_____	☐ 20
Fibre Cement	_____	☐ 30
Steel	_____	☐ 60
Aluminium	_____	☐ 70
Other	_____	☐ 80
Not Specified	_____	☐ 90

Frame		Code
Timber	_____	☑ 40
Steel	_____	☐ 60
Aluminium	_____	☐ 70
Other	_____	☐ 80
Not Specified	_____	☐ 90

Local South Coast
48b Princes Highway
Fairy Meadow NSW 2519
P - 02 4284 4709
F - 02 4284 4208

Local Norwest
Suite 21 5 Inglewood Place
Baulkham Hills NSW 2153
P - 02 9836 5711
F - 02 9836 5722

Local Central Coast
Suite 2/162 The Entrance Road
Erina NSW 2250
P - 02 4365 6051
F - 02 4365 4846

Local Macarthur
PO Box 3190
Narellan DC NSW 2567
P - 02 4648 5666
F - 02 4648 5755

E - info@localgroup com au
Web - http //localgroup com au
ABN - 30 735 366 565

9/7/08.

Clarendon Residential Group

EXTERNAL COLOUR SELECTION
CLARENDON HOMES

CLIENT: Callaghan JOB NO: 2990.3437

BUILDING ADDRESS: Lot 22 (#28) Heath St. Mona Vale.

BASIX Roof: Dark ☐ Medium ☐ Light ☐

Walls: Dark ☐ Medium ☑ Light ☐

Brick Supplier: TBA

Collection: TBA.

Brick Name: Commons.

Mortar: Off White Finish: Flush.

Moroka Bag/Paint: Main Body of Home / Mountain Shadow P196.N5 (If Applicable)

~~Render~~ Moroka Bagged/Paint Verandah Parapet. Wisp'o'Smoke P196.N2. (If Applicable)

Roof ~~Tiles~~: Colour: Woodland Grey Profile: Colourbond.

Cladding: N/A Other: N/A.

Windows: Pearl White Gable Feature: N/A.

Gutter: Woodland Grey. Fascia: Woodland Grey.

Barge Cap: Woodland Grey. (If Applicable)

Barge Board: Woodland Grey (If Applicable)

Downpipes/Meterbox: Woodland Grey. Eaves: Illusive White

Garage Door: Colour: Woodland Grey. Design: TBA

Front Door: Stained Timber.

Posts: Illusive White (If Applicable)

Railings: Colour: Pearl White Finish: Gloss. (If Applicable)

Water Tank: Woodland Grey.

Infill Panels: N/A. (If Applicable)

SIGNED DATED

9/7/08.

Clarendon Residential Group

RECEIVED 10 JUL 2008 BY: DFoss

EXTERNAL COLOUR SELECTION
CLARENDON HOMES

CLIENT: Callaghan. JOB NO: 2990.3437

BUILDING ADDRESS: Lot 22 (#28) Heath St Mona Vale

BASIX Roof: Dark ☑ Medium ☐ Light ☐

Walls: Dark ☐ Medium ☑ Light ☐

Mountain Shadow P196.N5.

Wisp'o'Smoke. P.196.N2

Pearl White (WH)
Gloss

Stained Timber Front Door. (Only)

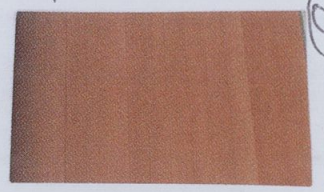

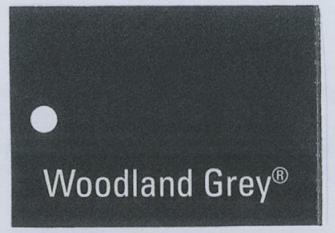

RECEIVED BY LOCAL CERTIFICATION SERVICES P/L on 30/7/08 (date)

RAFELETOS ZANUTTINI Pty Ltd
CONSULTING ENGINEERS

ABN 35 079 047 466
Level 2 103 Vanessa St
Kingsgrove NSW 2208

Telephone (02) 9554 9311
Facsimile (02) 9554 9764

DATE ORDERED 6/02/2008

OUR REFERENCE 29563CL

YOUR REFERENCE CALLAGHAN

LOCATION LOT 22 NO 28 HEATH STREET MONA VALE

BOREHOLE 1

Depth mm	*Material description*
00	Natural surface level
100	
200	LOAM/SANDY
300	----------
400	LOAM BROWN FINE SAND
500	----------
600	RED/BROWN FINE SAND
700	
800	
900	
1000	----------
1100	RED/WHITE FINE SAND
1200	MOIST

Taken Front of existing dwelling

BOREHOLE 2

Depth mm	*Material description*
00	Natural surface level
100	
200	
300	
400	
500	
600	AS BOREHOLE 1
700	
800	
900	
1000	
1100	
1200	

Taken Rear of existing dwelling

Approx pier depth (mm) 1 5M

Site Classification M

Engineer

John Rafeletos B E MIE Aust

Comments ADOPT 1X1 POD LAYOUT

Wind Region A

Terrain Category TC 3

Topographic Classification T1

Shielding Classification F S

Wind Classification N 2

CLARENDON HOMES

Condition of Footpath / Kerb & Gutter
Prior to Commencement of Building Works

To Council/Engineers Department
From Clarendon Homes

Any Kerb & Gutter	☑ Yes	☐ No	Damage	☑ Yes	☐ No
Any Footpath	☐ Yes	☑ No	Damage	☐ Yes	☐ No

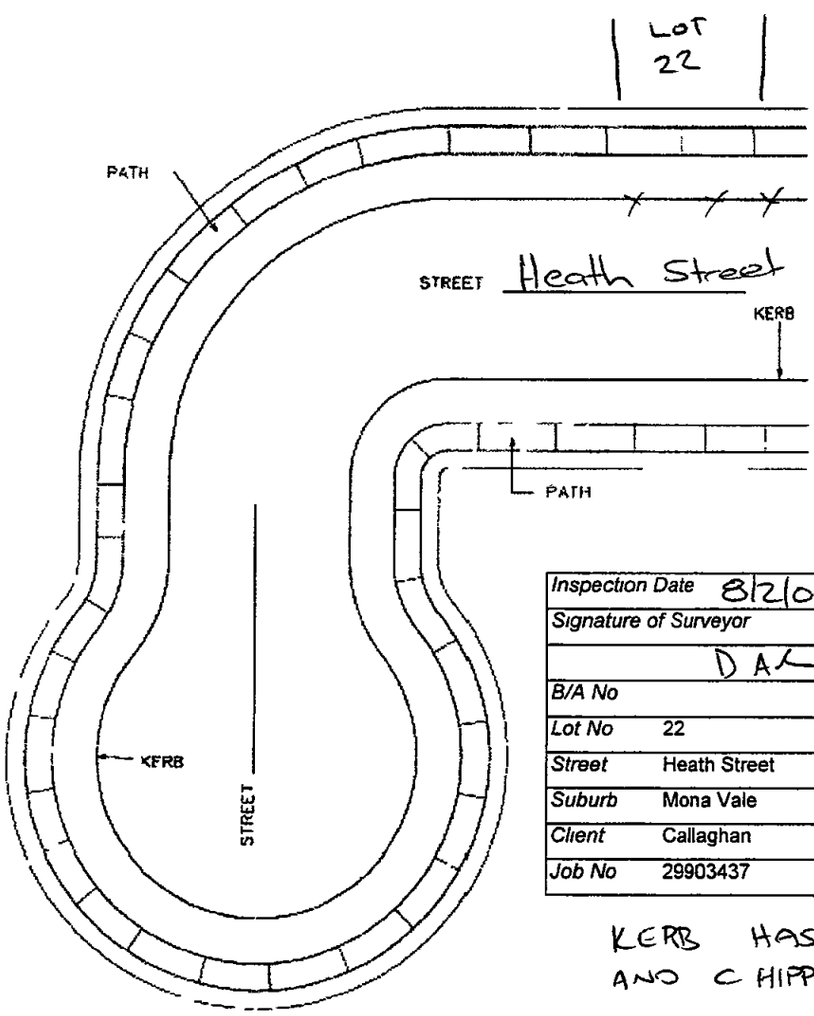

Inspection Date	8/2/08
Signature of Surveyor	DA
B/A No	
Lot No	22
Street	Heath Street
Suburb	Mona Vale
Client	Callaghan
Job No	29903437

KERB HAS CRACKING AND CHIPPING

Note Each damaged section must be indicated by a cross (X)

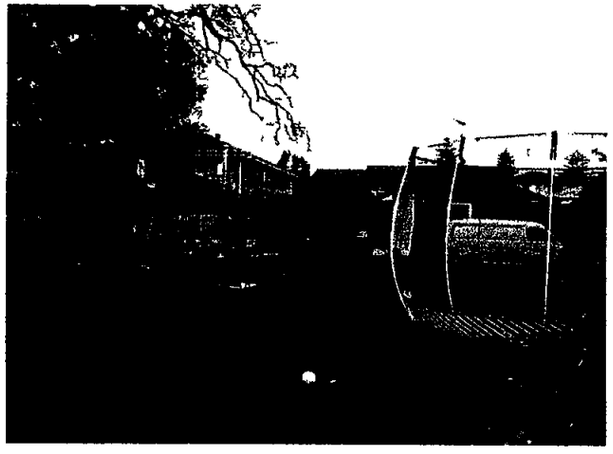

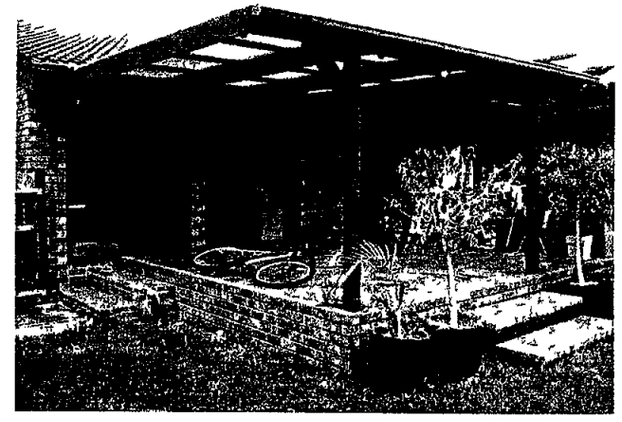

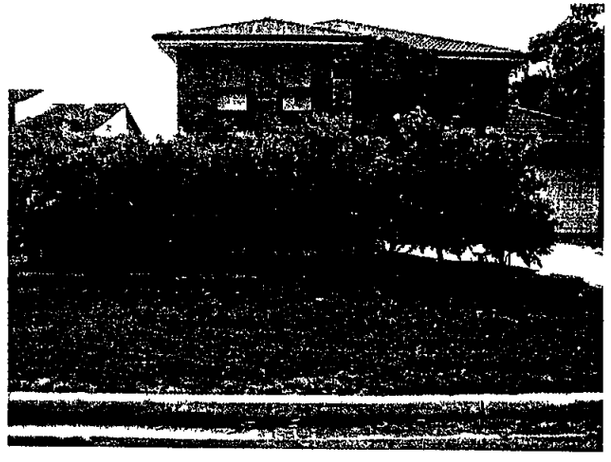
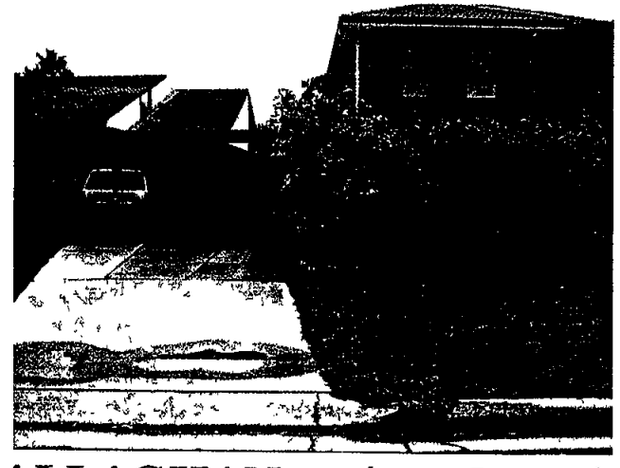

29903437 CALLAGHAN 21/1008702/7576:


HOME WARRANTY INSURANCE

Owners Copy

CGU POLICY CERTIFICATE NUMBER: 02.HWI.0067346 02

Home Building Regulation 2004 Clause 66(1)

Schedule 1 - Forms, Form 1

HOME BUILDING ACT 1989 Section 92

CERTIFICATE IN RESPECT OF INSURANCE RESIDENTIAL BUILDING WORK BY CONTRACTORS

A contract of insurance complying with section 92 of the *Home Building Act 1989*
has been issued by CGU Insurance Ltd ABN 27 004 478 371
in respect of

Construction of new residential dwelling

at

Lot 22 #28 Heath Street, Mona Vale, Nsw 2103

Builder Job Number

29903437

carried out by

Clarendon Homes (NSW) Pty Ltd ACN 003892706 ABN 18003892706

for

Mr Wayne Victor Callaghan and Mrs Deborah Susan Callaghan

Subject to the Act and the *Home Building Regulation 2004* and the conditions of the insurance contract, cover will be provided to a beneficiary described in the contract and successors in title to the beneficiary

Date 11th April 2008

Signed for and on behalf of the Insurers

This Certificate in respect of Insurance is issued for the building contract
dated 31/03/2008
for the contract sum of $352,423

CGU ELIGIBILITY NUMBER 0002458

This Certificate must be read in conjunction with the CGU "HOME WARRANTY INSURANCE POLICY WORDING" Please note that this Certificate and the Policy Wording are VERY IMPORTANT DOCUMENTS which should be read carefully and retained by you (and successive owners if applicable) for the duration of the statutory period of cover

Pittwater Council
ABN [illegible]

TAX INVOICE
OFFICIAL RECEIPT

[illegible] Receipt No [illegible]

[illegible]

[illegible]
[illegible]
[illegible]

Account	Reference	Amount
[illegible]	[illegible]	[illegible]
GL [illegible]	[illegible]	[illegible]
GL Rec [illegible]	[illegible]	[illegible]
GL Rec	[illegible]	$5 45
* GL Rec	[illegible]	[illegible]
GL Rec	[illegible]	[illegible]
GL Rec	GST	[illegible]
GL Rec	[illegible]	[illegible]
GL Rec	[illegible]	[illegible]
GL Rec	[illegible]	[illegible]

To GL Receipt

RECEIVED
23 MAY 2008
BY

Total Amount	$2 4[illegible] 22
Includes GST of	$34 31

23 MAY 2008

Amounts Tendered

Cheque	$2,446 22
Total	$2,446 22
Rounding	$0 00
Change	$0 00
Nett	$2,446 22

Printed 21/05/2008 4 46 46 PM
Cashier CLummas

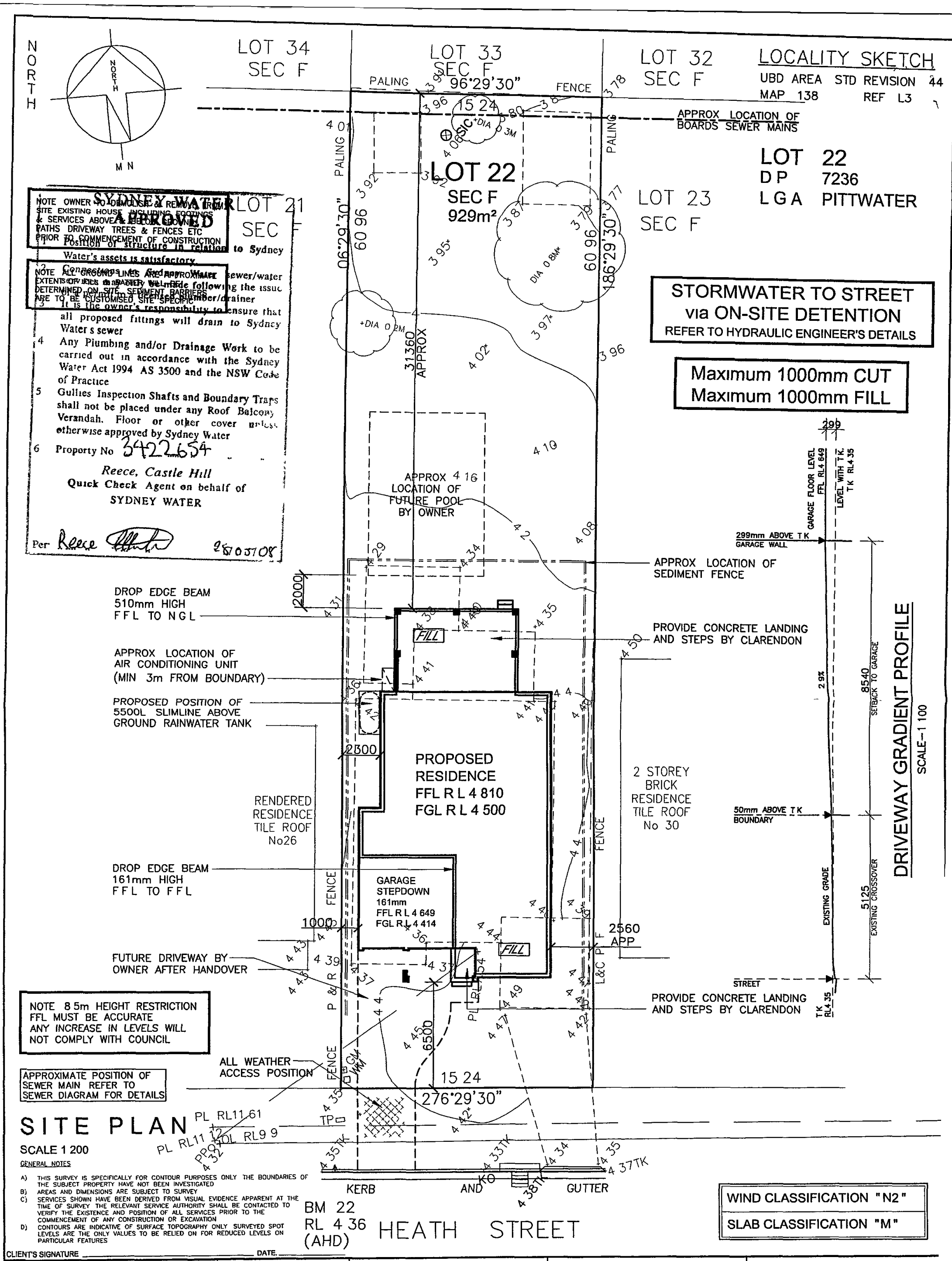

CLIENT'S SIGNATURE _____ DATE _____

Clarendon Residential Group
Clarendon Homes (NSW) P/L BL No 2298C ABN 18003892706
21 Solent Circuit Baulkham Hills NSW 2153
T (02) 8851 5300 F (02) 8851 5333

DIMENSIONS TO BE READ IN PREFERENCE TO SCALING

PRODUCT	CLIENT	D A DRAWING		
MADISON Urban L/H Garage Stylist Specification	Mr & Mrs CALLAGHAN SITE ADDRESS LOT 22 No 28 (DP 7236) HEATH STREET MONA VALE	DRAWN S A	DATE 28 02 08	Rev E
		RATIO 1 200 @ A3	CHECKED A H 3 3 08	
		SHEET 2	JOB No 29903437	

Foss, Debbie Callaghan

To Sophie_Garland@pittwater nsw gov au

Subject RE External colour selection for Callaghan / Lot No 22 heath St, Mona Vale / Job # 29903437 / DA-212/08

From Sophie_Garland@pittwater nsw gov au [mailto Sophie_Garland@pittwater nsw gov au]
Sent Tuesday, 15 July 2008 9 53 AM
To Fitton, Terri
Cc Foss, Debbie
Subject Re External colour selection for Callaghan / Lot No 22 heath St, Mona Vale / Job # 29903437 / DA-212/08

Hi Terri/Debbie

I have just received correspondence regarding 28 Heath St As previously discussed the condition does not require re-selected external colours to be submitted for Council approval and we will not be sending out stamped approved colours

The condition requires external colours and materials to be dark and earthy in accordance with Council's policy and these colours are to be "incorporated into the development and maintained over the life of the development" The changes to the external colours are to be submitted to the Certifier with the CC application

Regards
Sophie Garland
Planner
Pittwater Council
Ph 9970 1155

Sent to Local 28/7
D Foss

Pittwater Council

Sync

Search

Glossary

D9 3 Building colours, materials and construction

Outcomes

Outcomes

Achieve the desired future character of the Locality
The development enhances the visual quality and identity of the streetscape (S)
The colours and materials of the development harmonise with the natural environment (En S)
The visual prominence of the development is minimised (S)
Damage to existing native vegetation and habitat is minimised (En)

Controls

External colours and materials shall be dark and earthy tones as shown below

Black ✓ Dark gray ✓ Dark green ✓

Dark brown ✓ Mid gray ✓ Green ✓

Brown ✓ Dark blue ✓

White light coloured red or orange roofs and walls are not permitted

White ✗ Light Blue ✗ Red ✗

Orange ✗ Light gray ✗ Beige ✗

Limited use of corporate colours may be permitted within Business and Light Industrial zoned land

BASIX Certificate number: 196579S

Fixtures			
The applicant must install showerheads with a minimum rating of 3 star in all showers in the development		✓	✓
The applicant must install a toilet flushing system with a minimum rating of 3 star in each toilet in the development		✓	✓
The applicant must install taps with a minimum rating of 3 star in the kitchen in the development		✓	
The applicant must install basin taps with a minimum rating of 3 star in each bathroom in the development		✓	
Alternative water			
Rainwater tank			
The applicant must install a rainwater tank of at least 3500 litres on the site This rainwater tank must meet and be installed in accordance with the requirements of all applicable regulatory authorities	✓	✓	✓
The applicant must configure the rainwater tank to collect rain runoff from at least 200 square metres of the roof area of the development (excluding the area of the roof which drains to any stormwater tank or private dam)		✓	✓
The applicant must connect the rainwater tank to			
all toilets in the development		✓	✓
the cold water tap that supplies each clothes washer in the development		✓	✓
at least one outdoor tap in the development (Note NSWHealth does not recommend that rainwater be used for human consumption in areas with potable water supply)		✓	✓
Hot water			
The applicant must install the following hot water system in the development or a system with a higher energy rating gas instantaneous with a performance of 5 stars	✓	✓	✓
Cooling system			
The applicant must install the following cooling system or a system with a higher energy rating in at least 1 living area 3 phase airconditioning Energy rating EER 2 5 3 0		✓	✓
The applicant must install the following cooling system or a system with a higher energy rating in at least 1 bedroom 3 phase airconditioning Energy rating EER 2 5 3 0		✓	✓
The cooling system must provide for day/night zoning between living areas and bedrooms		✓	✓
Heating system			
The applicant must install the following heating system or a system with a higher energy rating in at least 1 living area 3 phase airconditioning Energy rating EER 3 0 3 5		✓	✓
The applicant must install the following heating system or a system with a higher energy rating in at least 1 bedroom 3 phase airconditioning Energy rating EER 3 0 3 5		✓	✓
The heating system must provide for day/night zoning between living areas and bedrooms		✓	✓
Ventilation			
The applicant must install the following exhaust systems in the development			
At least 1 Bathroom individual fan ducted to façade or roof Operation control manual switch on/off		✓	✓
Kitchen individual fan ducted to façade or roof Operation control manual switch on/off		✓	✓
Laundry natural ventilation only or no laundry Operation control n/a		✓	✓
Artificial lighting			
The applicant must ensure that the primary type of artificial lighting is fluorescent or light emitting diode (LED) lighting in each of the following rooms and where the word dedicated appears the fittings for those lights must only be capable of accepting fluorescent or light emitting diode (LED) lamps			
at least 4 of the bedrooms / study		✓	✓
the laundry		✓	✓
Natural lighting			
The applicant must install a window and/or skylight in the kitchen of the dwelling for natural lighting	✓	✓	✓
The applicant must install a window and/or skylight in 2 bathroom(s)/toilet(s) in the development for natural lighting	✓	✓	✓
Other			
The applicant must install a gas cooktop & electric oven in the kitchen of the dwelling		✓	
The applicant must install a fixed outdoor clothes drying line as part of the development.		✓	

This information relates to
Construction/Complying Development Certificate
5002360
Issued by Andrew Dean (02) 9836 5711
Building Professionals Board (BPB0087)

AREAS	
SITE	929 m²
GROUND FLOOR	153 04 m²
FIRST FLOOR	165 41 m²
GARAGE	33 55 m²
PORCH	2 90 m²
BALCONY	9 28 m²
ALFRESCO	37 50 m²
	m²
TOTAL	401 68 m²

NOTE: THESE PLANS MUST BE READ IN CONJUNCTION WITH THE CONDITIONS OF DEVELOPMENT CONSENT

APPROVED DEVELOPMENT PLANS

REV	DATE	AMENDMENTS	BY
E	13 05 08	BASIX VARIATION	M C
D	15 04 08	POST CONTRACT VARIATION	P L
C	14 03 08	CONTRACT PLAN	P L
B	10 03 08	ACCEPTED TENDER	S A
A	28 02 08	SITE PLAN	S A

SHEET	DESCRIPTION
22	CONSTRUCTION MANAGEMENT
21	SHADOW DIAGRAM @ 21ST JUNE
8	ELECTRICAL PLAN
7	SECTION & DETAILS
6	ELEVATIONS
5	ELEVATIONS
4	FIRST FLOOR PLAN
3	GROUND FLOOR PLAN
2	SITE PLAN
1	COVER SHEET

CLIENT S SIGNATURE _____ DATE _____

Clarendon Residential Group
Clarendon Homes (NSW) P/L
BL No 2298C
ABN 18003892706
21 Solent Circuit Baulkham Hills NSW 2153
T (02) 8851 5300 F (02) 8851 5333

DIMENSIONS TO BE READ IN PREFERENCE TO SCALING

PRODUCT
MADISON
Urban
L/H Garage

Stylist Specification

Master Issued 10 09 07 Revision C

CLIENT
Mr & Mrs CALLAGHAN

SITE ADDRESS
LOT 22 No 28 (DP 7236)
HEATH STREET
MONA VALE

D A DRAWING

DRAWN	DATE	Rev
P L	14 03 08	E
RATIO N\A	CHECKED Z V 17 3 08	
SHEET 1	JOB No 29903437	

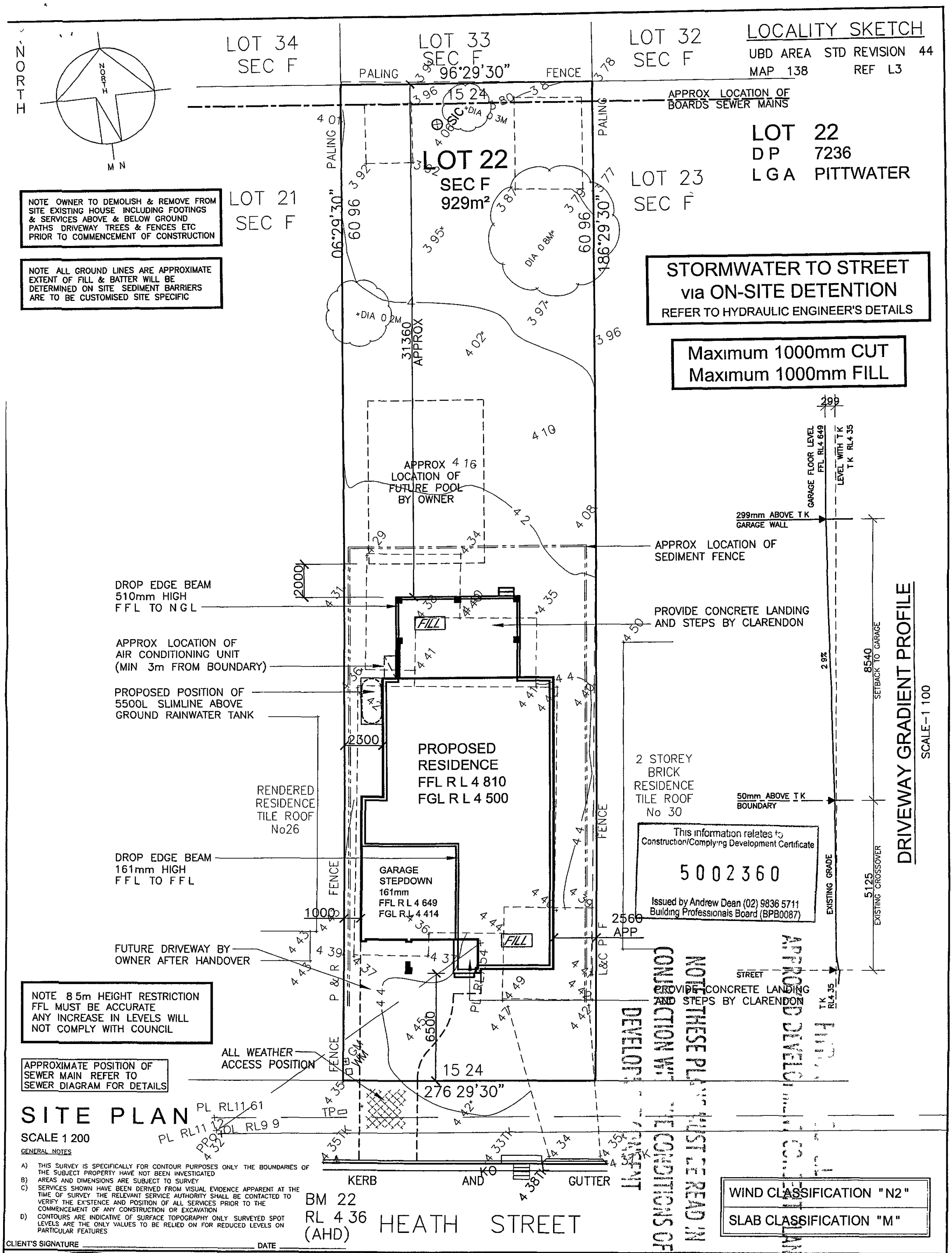

Clarendon Residential Group
Clarendon Homes (NSW) P/L BL No 2298C ABN 18003892706
21 Solent Circuit Baulkham Hills NSW 2153
T (02) 8851 5300 F (02) 8851 5333

DIMENSIONS TO BE READ IN PREFERENCE TO SCALING

PRODUCT	MADISON Urban L/H Garage Stylist Specification	CLIENT	Mr & Mrs CALLAGHAN
SITE ADDRESS	LOT 22 No 28 (DP 7236) HEATH STREET MONA VALE	D A DRAWING	
DRAWN	S A	DATE	28 02 08
Rev	E	RATIO	1 200 @ A3
CHECKED	A H 3 3 08	SHEET	2
JOB No	29903437		

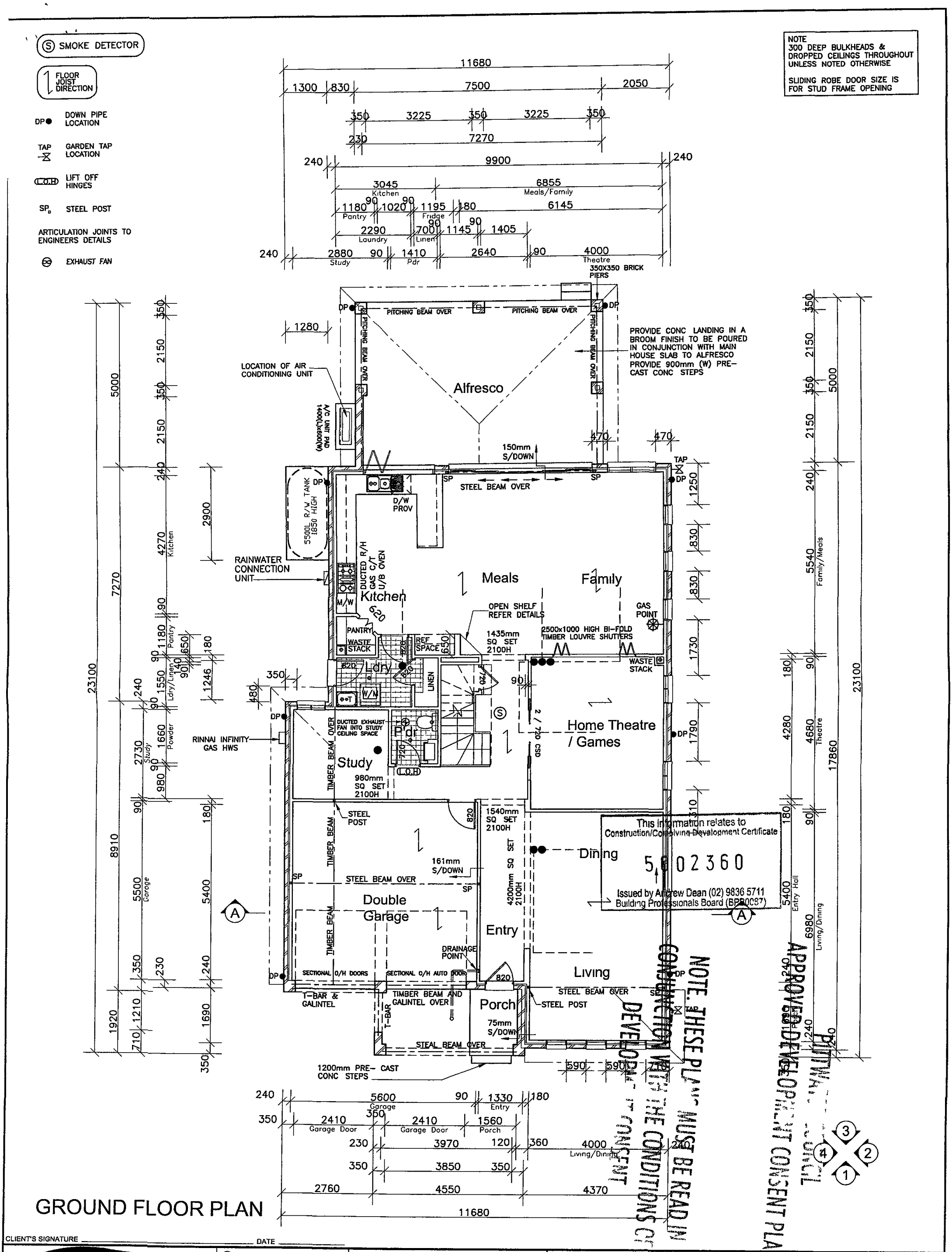

CLIENT'S SIGNATURE _____ DATE _____

Clarendon Residential Group
Clarendon Homes (NSW) P/L
21 Solent Circuit Baulkham Hills NSW 2153
T (02) 8851 5300 F (02) 8851 5333
BL No 2298C
A B N 18003892706

DIMENSIONS TO BE READ IN PREFERENCE TO SCALING

PRODUCT
MADISON
Urban
L/H Garage
Stylist Specification

CLIENT
Mr & Mrs CALLAGHAN

SITE ADDRESS
LOT 22 No 28 (DP 7236)
HEATH STREET
MONA VALE

D A DRAWING

DRAWN	DATE	Rev
P L	14 03 08	E
RATIO 1 100 @ A3	CHECKED Z V 17 3 08	
SHEET 3	JOB No 29903437	

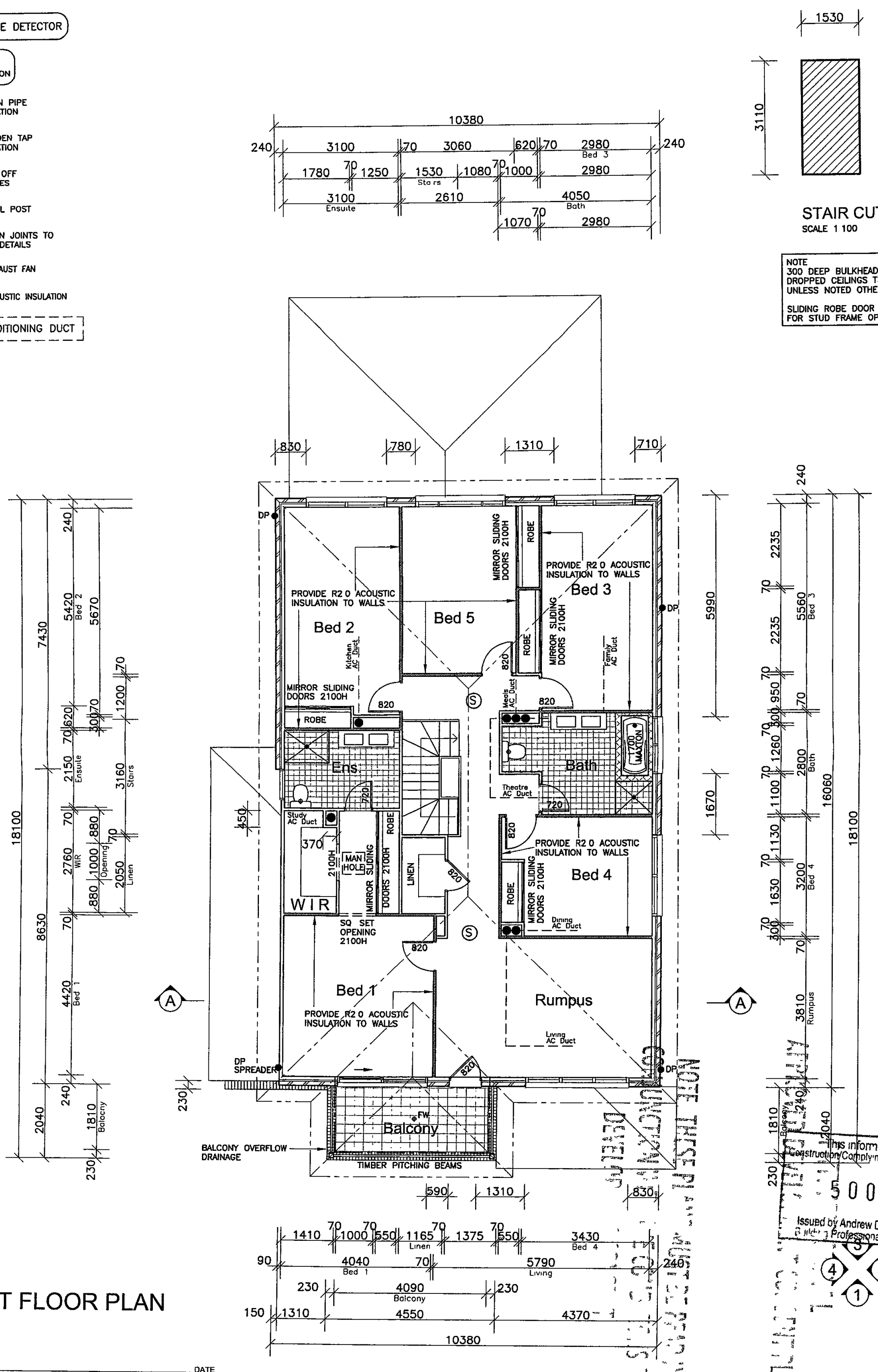

CLIENT'S SIGNATURE _____ DATE _____

Clarendon Residential Group
Clarendon Homes (NSW) P/L
ABN 18003892706
BL No 2298C
21 Solent Circuit Baulkham Hills NSW 2153
T (02) 8851 5300 F (02) 8851 5333

DIMENSIONS TO BE READ IN PREFERENCE TO SCALING

PRODUCT
MADISON
Urban
L/H Garage
Stylist Specification

CLIENT
Mr & Mrs CALLAGHAN

SITE ADDRESS
LOT 22 No 28 (DP 7236)
HEATH STREET
MONA VALE

D A DRAWING

DRAWN	DATE	Rev
P L	14 03 08	E
RATIO 1 100 @ A3	CHECKED Z V 17 3 08	
SHEET 4	JOB No 29903437	

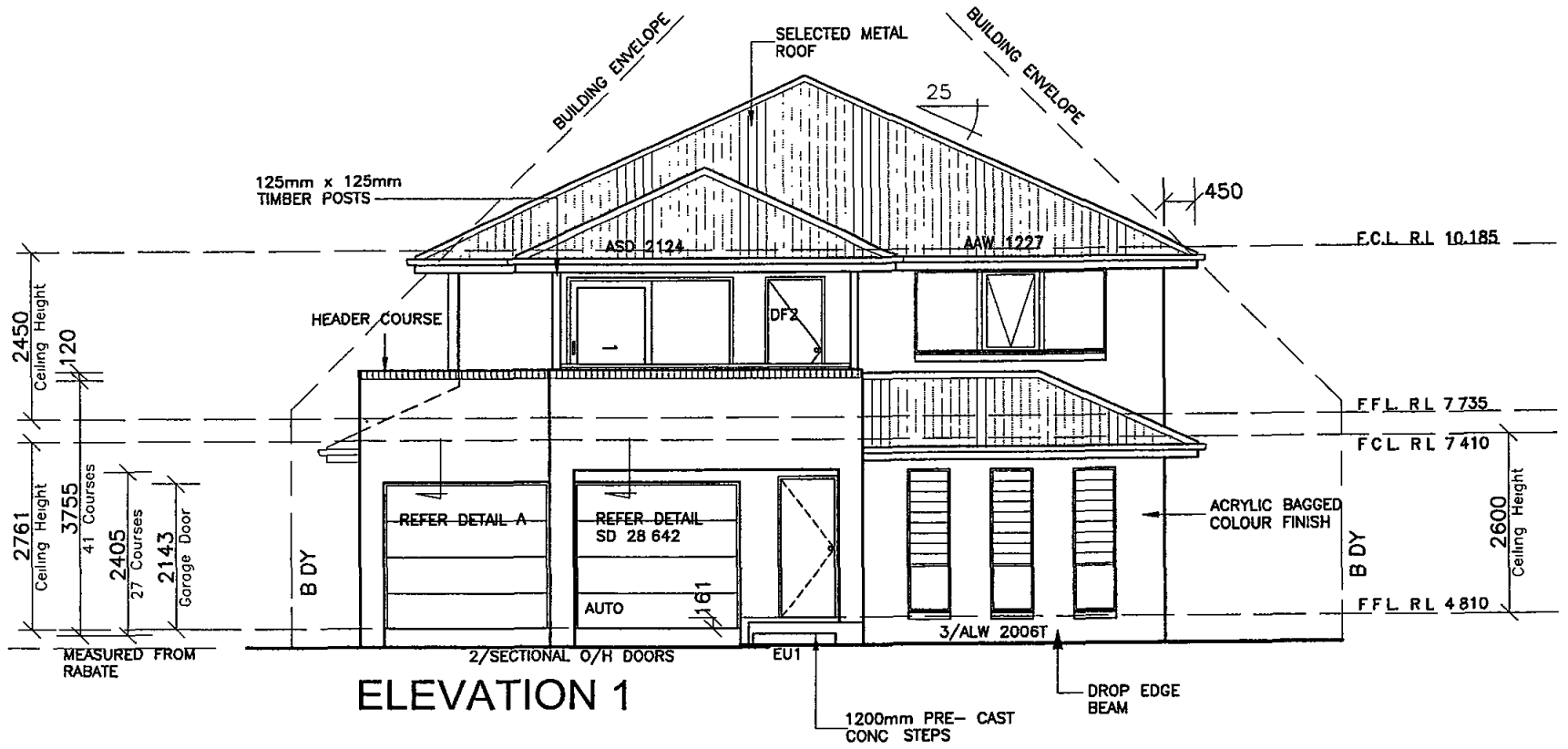

ELEVATION 1

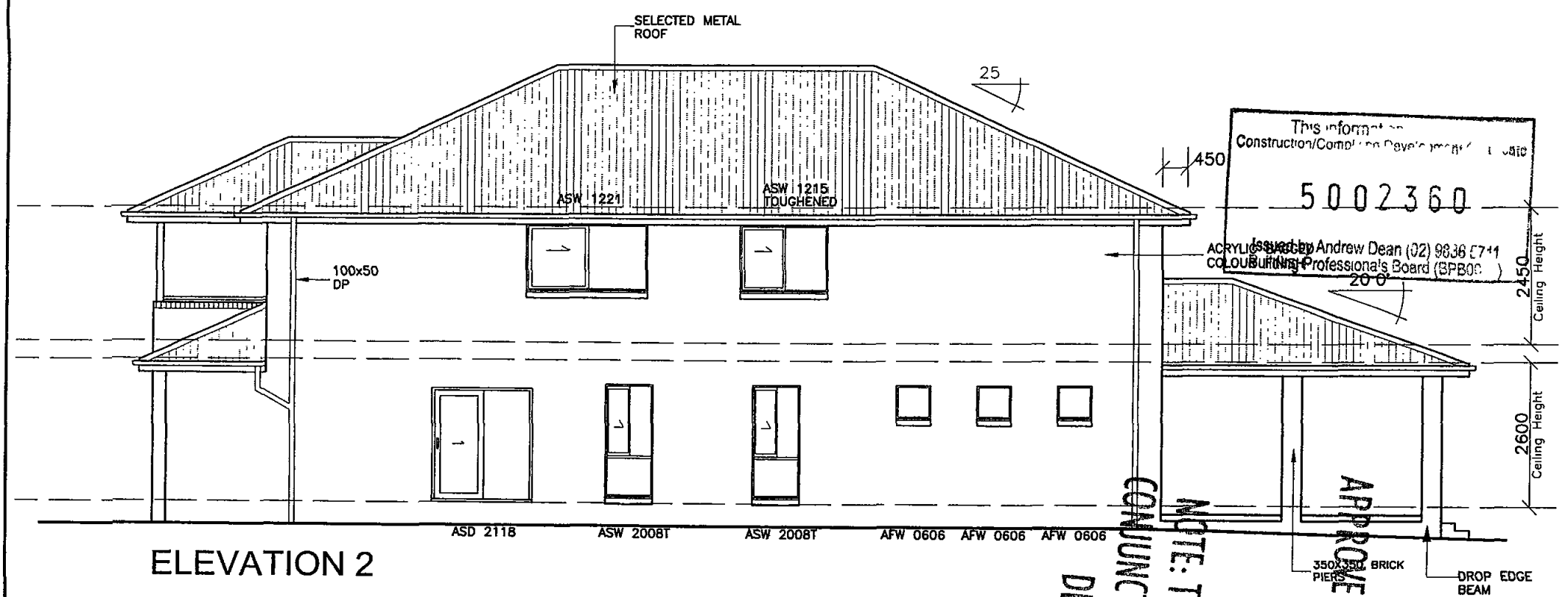

ELEVATION 2

CLIENT'S SIGNATURE _____ DATE _____

Clarendon Residential Group
Clarendon Homes (NSW) P/L A.B.N 18003892706 BL No 2298C
21 Solent Circuit Baulkham Hills NSW 2153
T (02) 8851 5300 F (02) 8851 5333

DIMENSIONS TO BE READ IN PREFERENCE TO SCALING

PRODUCT
MADISON
Urban
L/H Garage

Stylist Specification

CLIENT
Mr & Mrs CALLAGHAN

SITE ADDRESS
LOT 22 No 28 (DP 7236)
HEATH STREET
MONA VALE

D A DRAWING

DRAWN	DATE	Rev
P L	14 03 08	E
RATIO 1 100 @ A3	CHECKED Z V 17 3 08	
SHEET 5	JOB No 29903437	

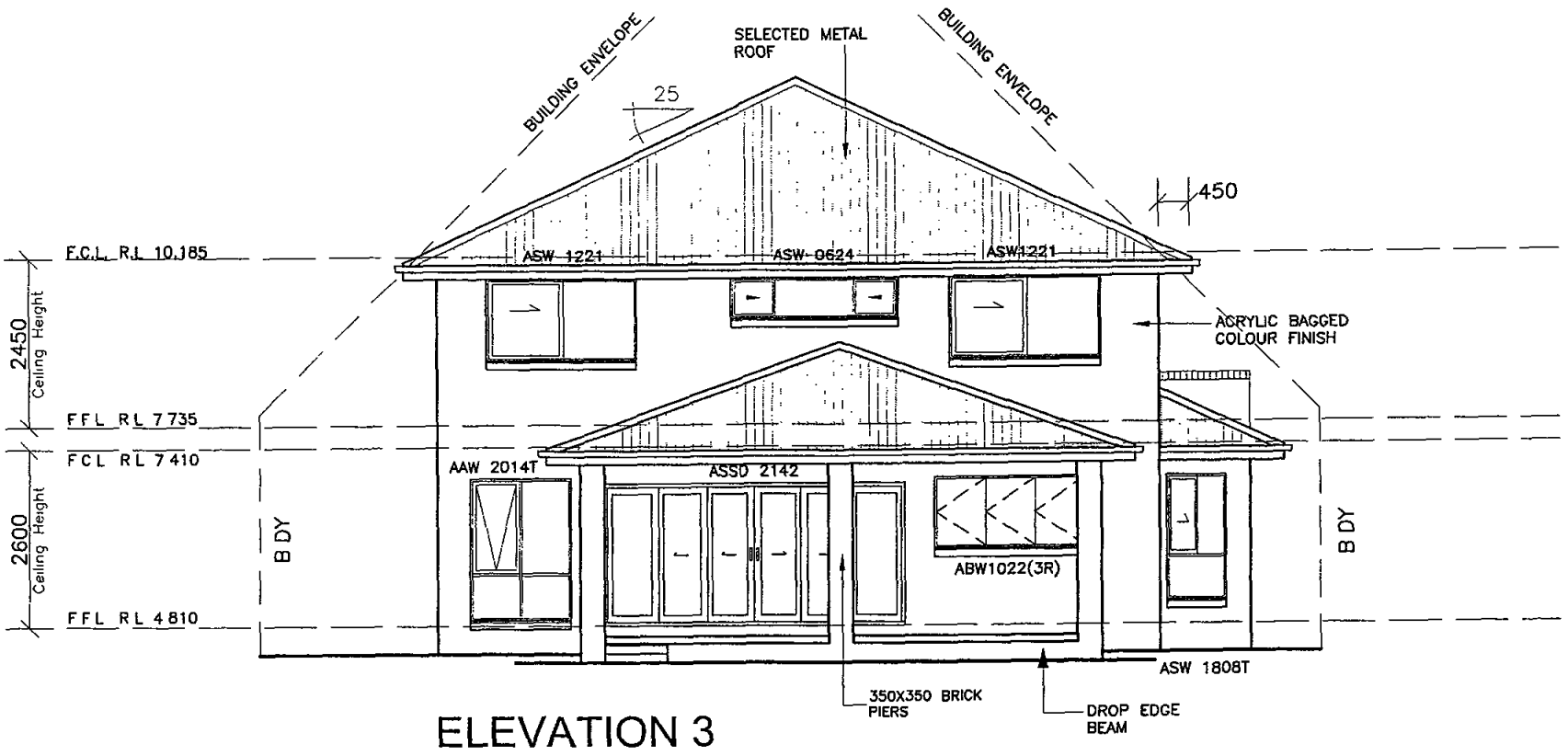

ELEVATION 3

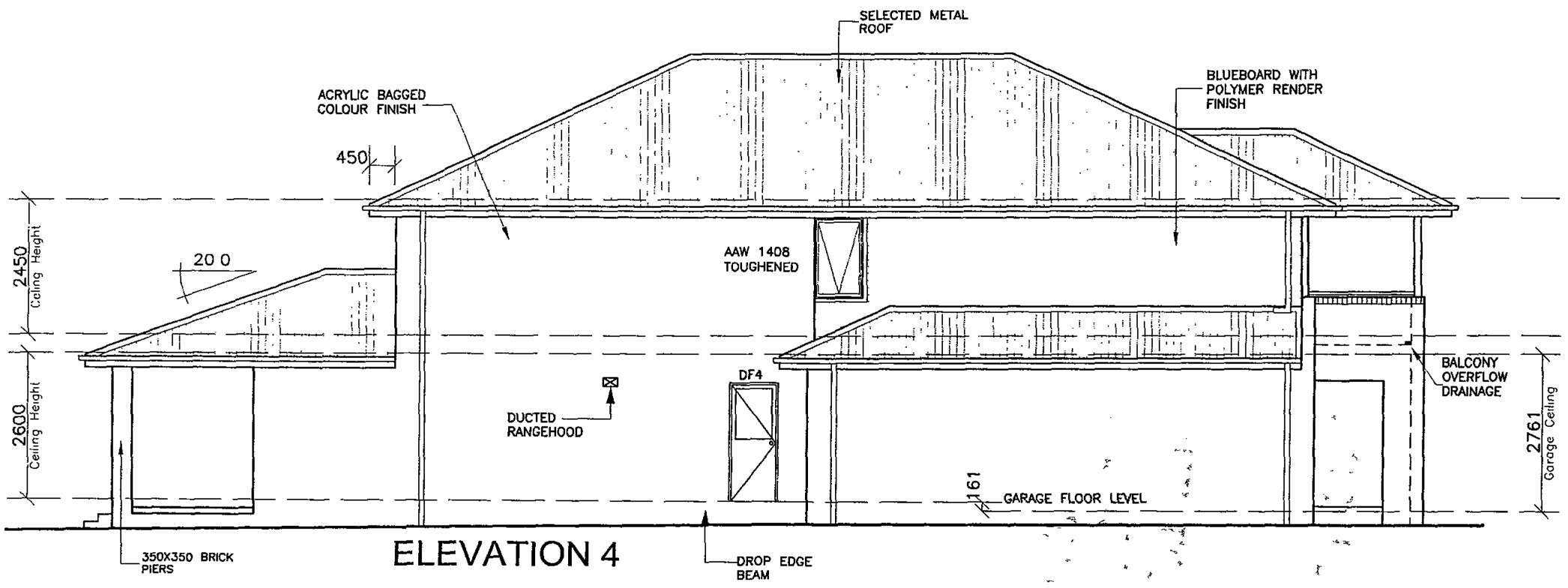

ELEVATION 4

This information relates to Construction/Complying Development Certificate

5002360

Issued by Andrew Dean (02) 9836 5711
Building Professionals Board (BPB00?7)

CLIENT'S SIGNATURE _____ DATE _____

Clarendon Residential Group
Clarendon Homes (NSW) P/L
21 Solent Circuit Baulkham Hills NSW 2153
T (02) 8851 5300 F (02) 8851 5333
BL No 2298C
A B N 18003892706

DIMENSIONS TO BE READ IN PREFERENCE TO SCALING

PRODUCT
MADISON
Urban
L/H Garage

Stylist Specification

CLIENT
Mr & Mrs CALLAGHAN

SITE ADDRESS
LOT 22 No 28 (DP 7236)
HEATH STREET
MONA VALE

D A DRAWING

DRAWN	DATE	Rev
P L	14 03 08	E
RATIO 1 100 @ A3	CHECKED Z V 17 3 08	
SHEET 6	JOB No 29903437	

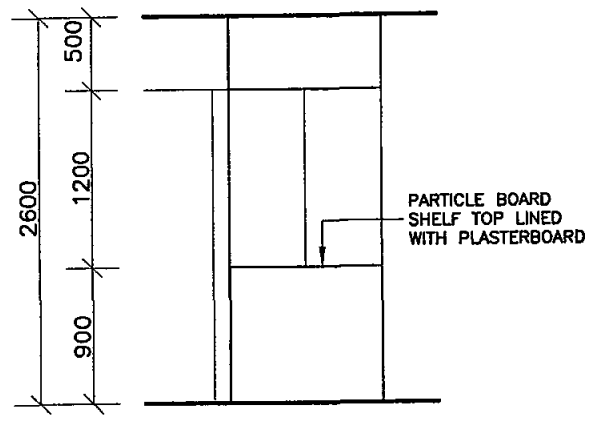

KITCHEN OPEN SHELF DETAIL

SCALE 1 50

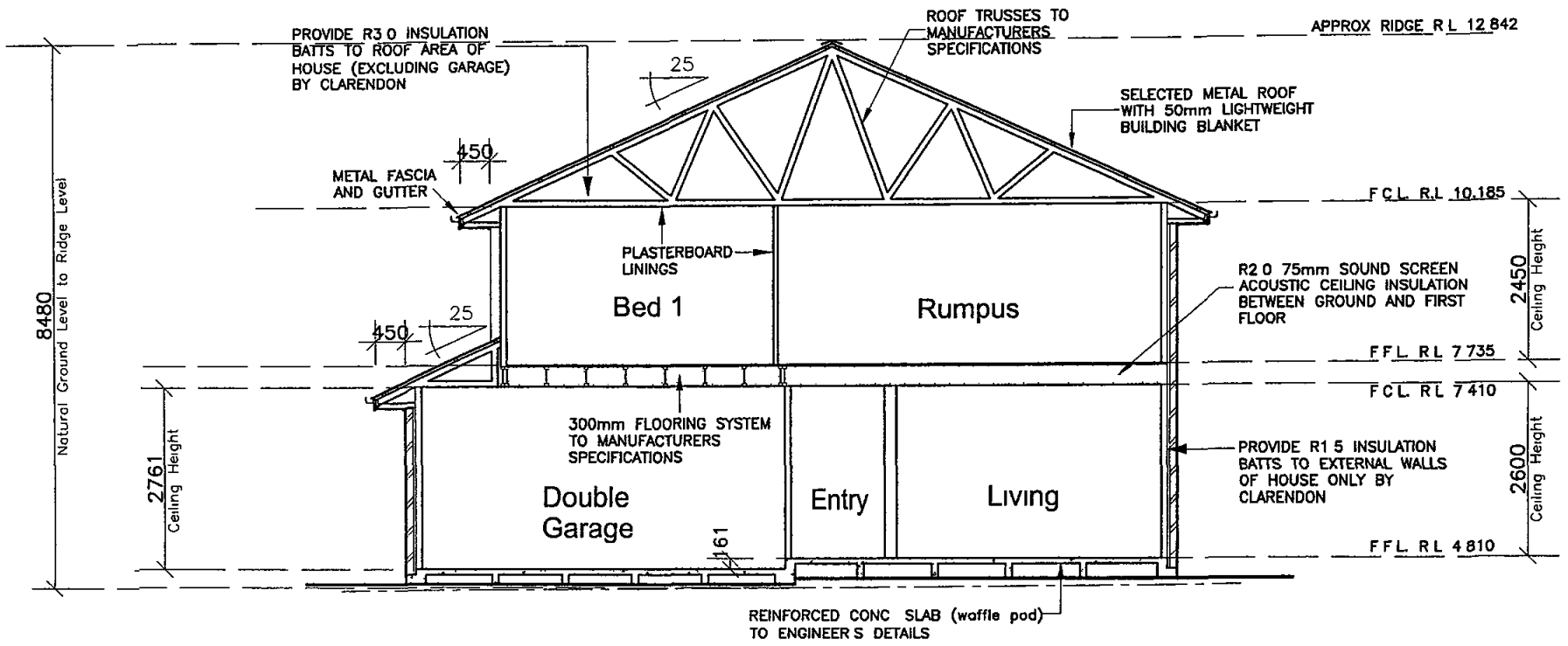

SECTION A-A

*PROVIDE BORAL UNIVERSAL RANGE EXPOSURE GRADE COMMON BRICKS DUE TO PROXIMITY OF COASTAL WATERS
*PROVIDE STAINLESS STEEL WALL TIES
*PROVIDE LINTELS AND EXPOSED STRUCTURAL STEEL DUE TO PROXIMITY TO COASTAL WATERS
*PROVIDE COLORBOND VALLEY GUTTERS
*PROVIDE EXPOSURE GRADE MORTAR DUE TO PROXIMITY OF COASTAL WATERS

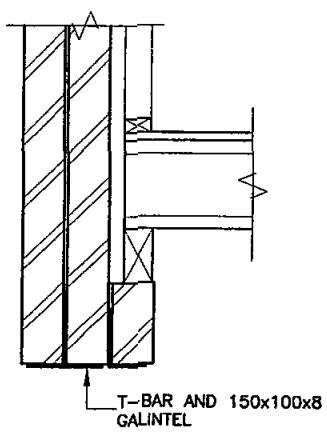

SECTION "A"

SCALE 1 20

MEDIUM EXTERNAL WALL COLOUR DARK EXTERNAL ROOF COLOUR
5 STAR GAS INSTANTANEOUS HWU
3STAR RATED SHOWERHEADS 3STAR RATED TOILET FLUSHING SYSTEM *KITCHEN & BATHROOM TAPS WITH MINIMUM 3STAR FLOW RATE *PROVIDE WATER SAVING FLICKMIXER KITCHEN TAP
PROVIDE ENERGY SAVING FLUORESCENT GLOBES TO AS PER BASIX CERTIFICATE
WEATHER STRIP ACROSS ENTRY AND LAUNDRY DOOR BY OWNER
RAINWATER TANK MUST CONNECT TO ALL TOILETS IN THE DEVELOPMENT WATER TAP THAT SUPPLIES WASHING MACHINE AND ONE GARDEN TAP

APPROVED DEVELOPMENT

This information relates to Construction/Complying Development Certificate

5002360

Issued by Andrew Dean (02) 9836 5711
Building Professionals Board (BPB0087)

CLIENT'S SIGNATURE _____ DATE _____

Clarendon Residential Group
Clarendon Homes (NSW) P/L
BL No 2298C
A B N 18003892706
21 Solent Circuit Baulkham Hills NSW 2153
T (02) 8851 5300 F (02) 8851 5333

DIMENSIONS TO BE READ IN PREFERENCE TO SCALING

PRODUCT
MADISON
Urban
L/H Garage
Stylist Specification

CLIENT
Mr & Mrs CALLAGHAN

SITE ADDRESS
LOT 22 No 28 (DP 7236)
HEATH STREET
MONA VALE

D A DRAWING

DRAWN	DATE	Rev
P L	14 03 08	E
RATIO 1 100 @ A3	CHECKED Z V 17 3 08	
SHEET 7	JOB No 29903437	

ELECTRICAL LEGEND	
⊕	EXHAUST FAN
Ⓢ	SMOKE DETECTOR

◎	AIR CONDITIONING DUCT

Electrical Legend- Standard items		Electrical Legend- Extra over items	
SINGLE POWER POINT	0	AIR CONDITIONING	1
DOUBLE POWER POINT	17	GAS C/T SINGLE POWER POINT	1
CEILING LIGHT OUTLET	27	GAS POINT	2
EXT WALL MOUNTED LIGHT POINT	3	AUTO DR SINGLE POWER POINT	2
SMOKE DETECTOR	3	ALARM DOUBLE POWER POINT	1
EXHAUST FAN	1	INTERCOM SINGLE POWER POINT	1
2-WAY SWITCH	1	VACUUM SINGLE POWER POINT	0
D/W SINGLE POWER POINT	1	SPA SINGLE POWER POINT	0
REF SINGLE POWER POINT	1	DOWN LIGHT	0
M/W SINGLE POWER POINT	1	INT WALL MOUNTED LIGHT	0
R/H SINGLE POWER POINT	1	TV POINT	0
OVEN ISOLATOR SWITCH	1	PHONE POINT	0
W/M DOUBLE POWER POINT	1		

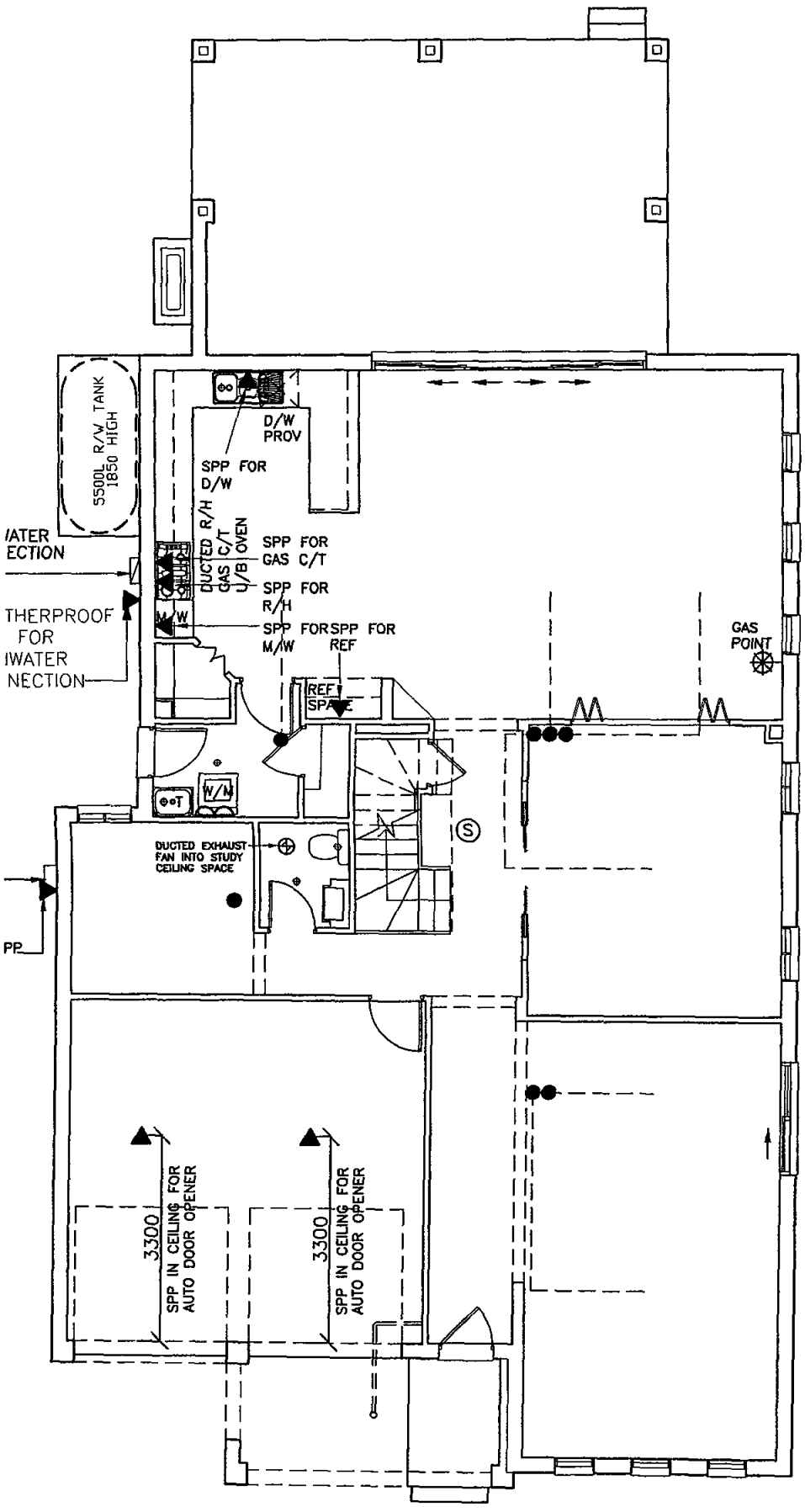

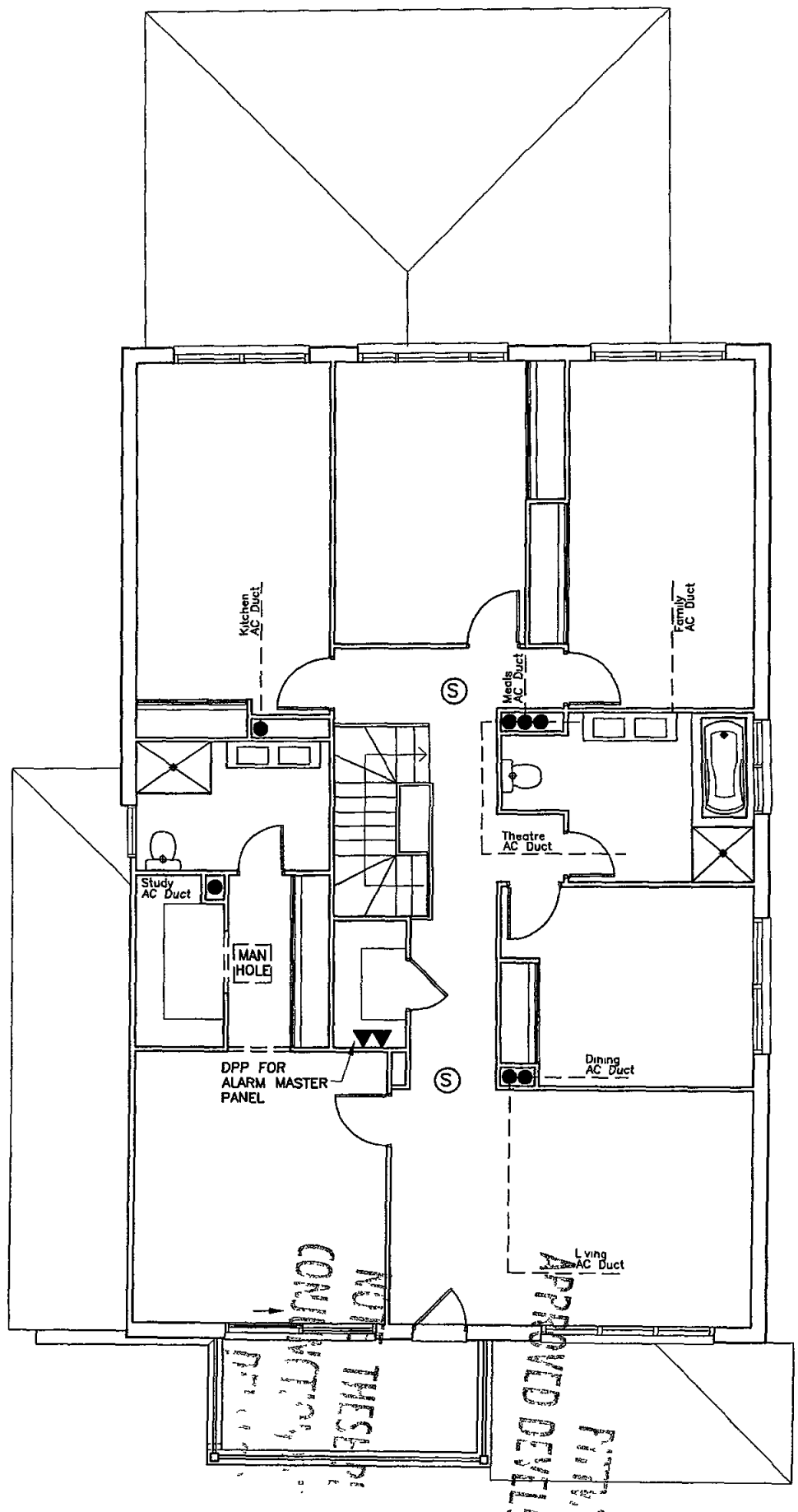

This information relates to Construction/Complying Development Certificate

5002360

Issued by Andrew Dean (02) 9836 5711
Building Professionals Board (BPB0037)

CLIENT'S SIGNATURE _____ DATE _____

Clarendon Residential Group
Clarendon Homes (NSW) P/L
21 Solent Circuit Baulkham Hills NSW 2153
T (02) 8851 5300 F (02) 8851 5333
BL No 2298C
A B N 18003892706

DIMENSIONS TO BE READ IN PREFERENCE TO SCALING

PRODUCT
MADISON
Urban
L/H Garage

Stylist Specification

CLIENT
Mr & Mrs CALLAGHAN

SITE ADDRESS
LOT 22 No 28 (DP 7236)
HEATH STREET
MONA VALE

D A DRAWING

DRAWN	DATE	Rev
P L	14 03 08	E
RATIO 1 100 @ A3	CHECKED Z V 17 3 08	
SHEET 8	JOB No 29903437	

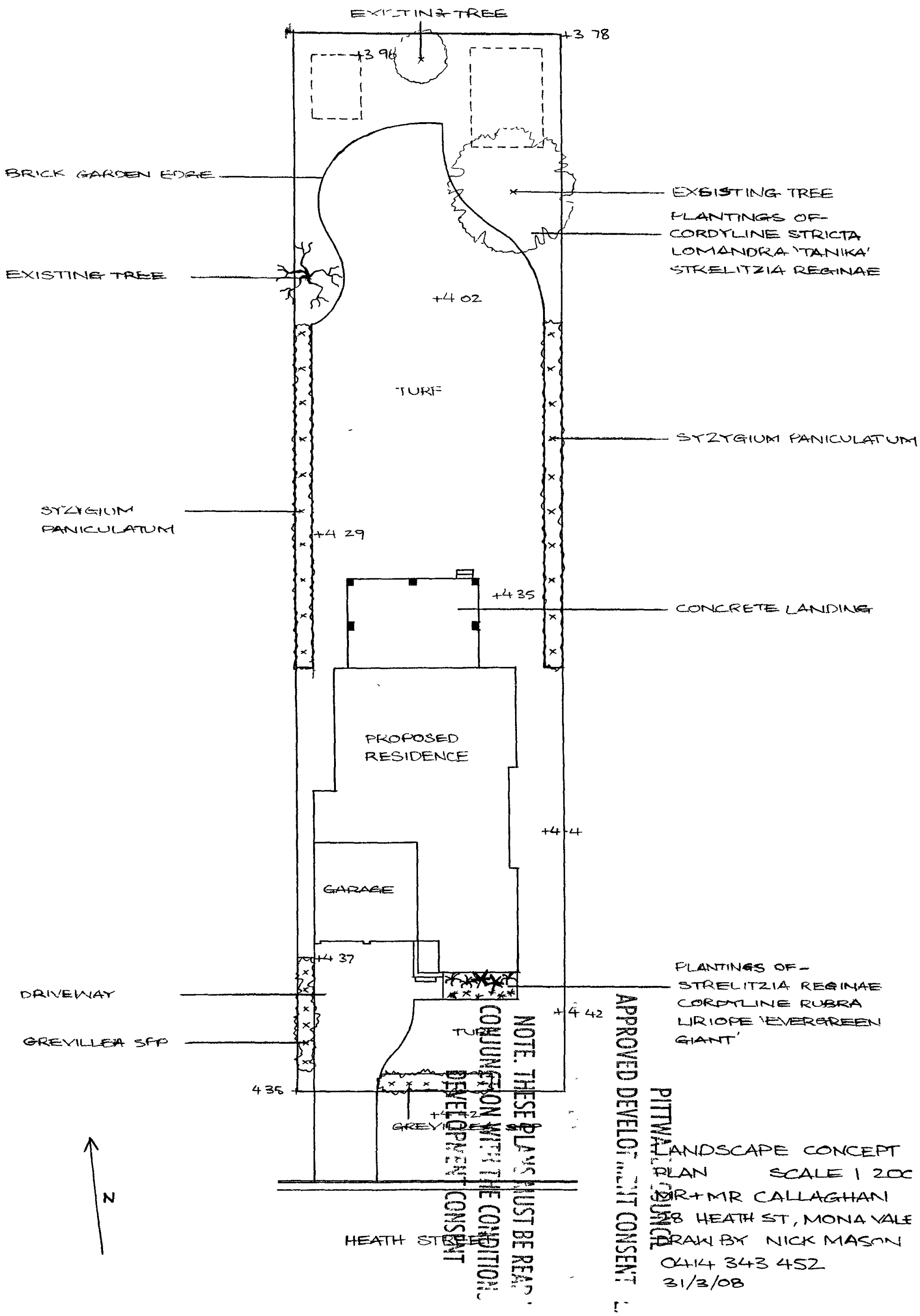
EXISTING TREE
+3 78
+3 96
BRICK GARDEN EDGE
EXISTING TREE
PLANTINGS OF-
CORDYLINE STRICTA
LOMANDRA 'TANIKA'
STRELITZIA REGINAE
EXISTING TREE
+4 02
TURF
SYZYGIUM PANICULATUM
SYZYGIUM
PANICULATUM
+4 29
+4 35
CONCRETE LANDING
PROPOSED
RESIDENCE
+4 4
GARAGE
+4 37
PLANTINGS OF-
STRELITZIA REGINAE
CORDYLINE RUBRA
LIRIOPE 'EVERGREEN
GIANT'
DRIVEWAY
GREVILLEA SPP
+4 42
TURF
4 36
+4 42
GREVILLEA
N
HEATH STREET
NOTE. THESE PLANS MUST BE READ
CONJUNCTION WITH THE CONDITIONS
DEVELOPMENT CONSENT
APPROVED DEVELOPMENT CONSENT
PITTWATER COUNCIL
LANDSCAPE CONCEPT
PLAN SCALE 1 200
MR+MR CALLAGHAN
28 HEATH ST, MONA VALE
DRAWN BY NICK MASON
0414 343 452
31/3/08

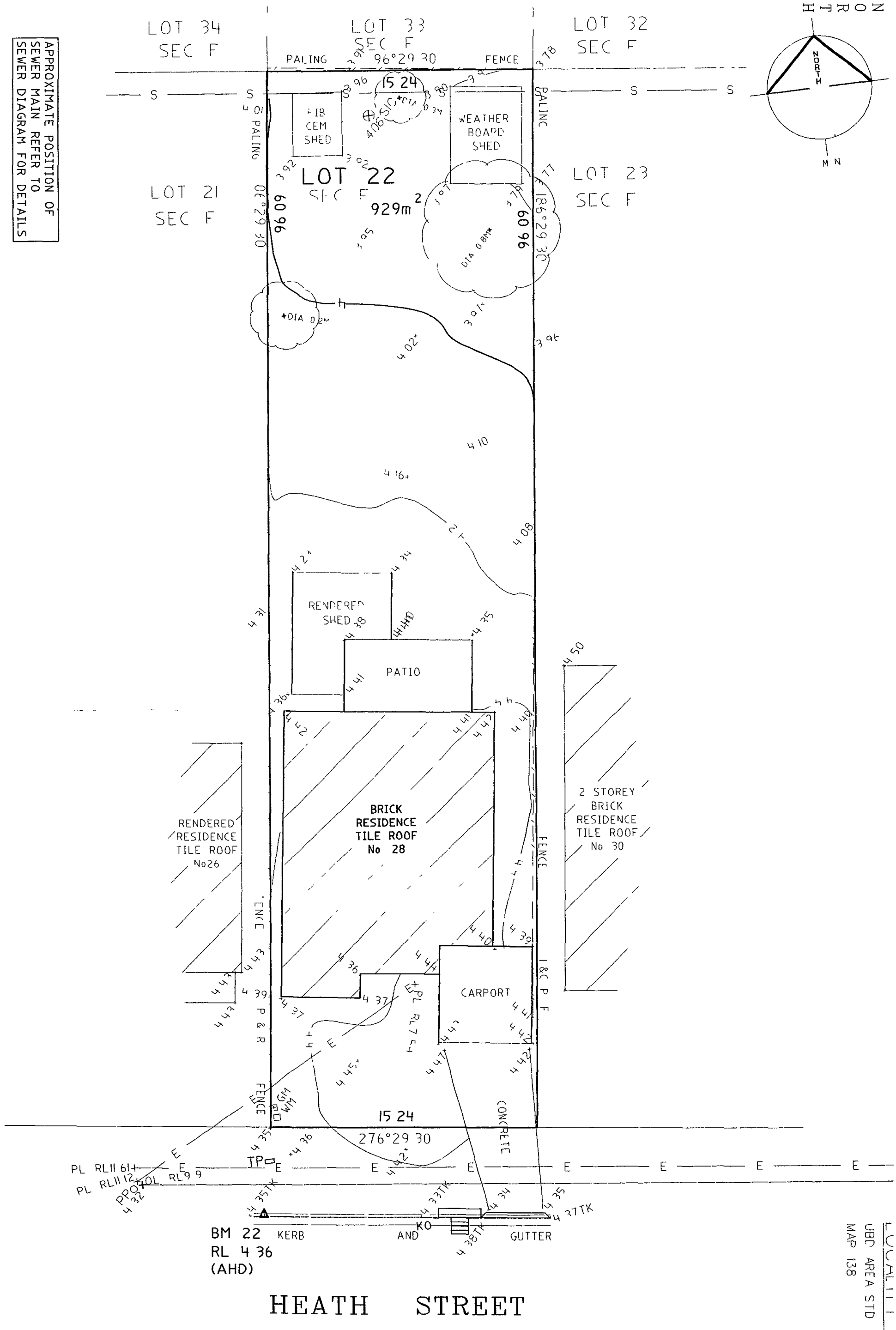

APPROXIMATE POSITION OF SEWER MAIN REFER TO SEWER DIAGRAM FOR DETAILS

COPYRIGHT

GENERAL NOTES

A) THIS SURVEY IS SPECIFICALLY FOR CONTOUR PURPOSES ONLY THE BOUNDARIES OF THE SUBJECT PROPERTY HAVE NOT BEEN INVESTIGATED

B) SERVICES SHOWN HAVE BEEN DERIVED FROM VISUAL EVIDENCE APPEAR AND DIMENSIONS ARE SUBJECT TO SURVEY

C) THE APPARENT AT THE TIME OF SURVEY THE RELEVANT SERVICE AUTHORITY SHALL BE CONTACTED TO VERIFY THE EXISTENCE AND POSITION OF ALL SERVICES PRIOR TO THE COMMENCEMENT OF ANY CONSTRUCTION OR EXCAVATION

D) CONTOURS ARE APPROXIMATE OF SURFACE TOPOGRAPHY ONLY SURVEYED SPOT LEVELS ARE THE ONLY VALUES TO BE RELIED ON FOR REDUCED LEVELS ON PARTICULAR FEATURES

SYMBOLS & ABBREVIATIONS

GP	GULLY PIT	E	OVERHEAD ELEC LINE
HYD	HYDRANT	S	SEWER LINE
SIP	SURFACE INLET PIT	G	GAS METER
SIC	SEWER INSPECTION COVER	LP	LIGHT POLE
SMH	SEWER MANHOLE	ECT	ELECTRICITY CONDUIT
W/M	WATER METER	ECT	ELEC & TELE CONDUIT
EL	ELECTRICITY BOX	TC	TELECOM CONDUIT
TP	TELECOM PIT	WC	WATER CONDUIT
VC	VEHICLE CROSS INC	INV	INVERT
SV	STOP VALVE	KO	KERB OUTLET
SWMH	STORMWATER MANHOLE	TK	TOP of KERB

ASPECT DEVELOPMENT & SURVEY PTY LTD

CONSULTING REGISTERED SURVEYORS

ABN 60 078 649 700

LEVEL 7 VANESSA STREET
103 KINGS ROYE NSW 2208
PHONE (02) 9554 8388
FAX (02) 95 4 8588

PO BOX 61
KINGSGROVE NSW 1480

DX 794
HURSTVILLE

PROJECT

OUR REFERENCE	21/1008702/75763
LOT 22	DP 7236 SECTION F
DATUM AHD	SOURCE SCIMS 07/02/08
ORIGIN OF LEVELS PM 46352	REDUCED LEVEL 6 725
SURVEYED P/	DATE 08/02/08
DRAWN LK/JN	DATE 20/02/008
SCALE 1 200	

CLIENT	CLARENDON HOMES PTY LTD
REF	CALLAGHAN
REF	299034 37
ADDRESS	28 HEATH STREET
SUBURB	MONA VALE

LOCALITY SKETCH
UBD AREA STD REVISION 44
MAP 138 REF L3

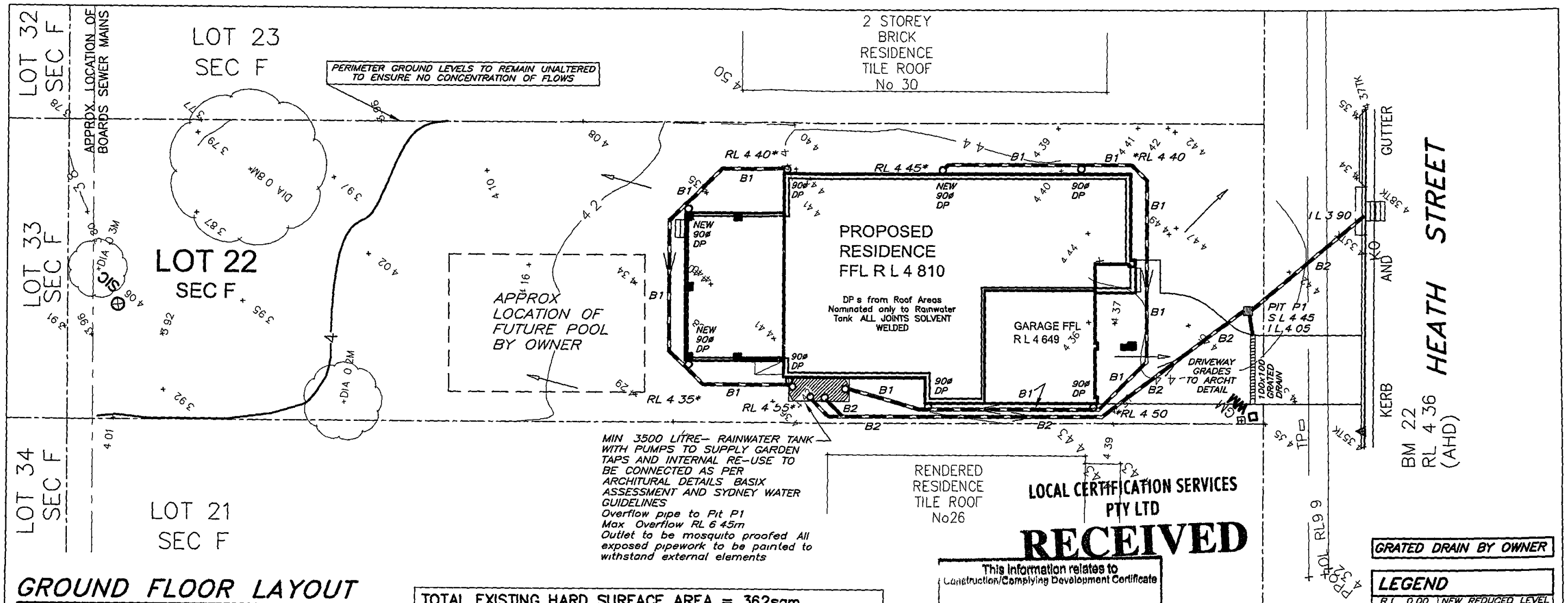

LOCAL CERTIFICATION SERVICES PTY LTD

RECEIVED

This information relates to Construction/Complying Development Certificate

5002360

Issued by Andrew Dean (02) 9836 5711
Building Professionals Board (BPB0087)

GROUND FLOOR LAYOUT

REFER TO SHEET 2 FOR RAINWATER TANK DETAILS
LEAF GUTTER GUARDS OR SIMILAR SCREENING RECOMMENDED TO ALL GUTTERS

TOTAL EXISTING HARD SURFACE AREA = 362sqm
TOTAL PROPOSED HARD SURFACE AREA = 315sqm
ADDITIONAL HARD SURFACE AREA <25sqm HENCE NO OSD

PIPE SCHEDULE

REFER TO NOTES FOR PIPE CLASS

TAG	PIPE DIA	MIN GRADE
B1	100	CHARGED
B2	100	2%

ALL OTHER SURFACE WATERS TO BE STRICTLY CONNECTED TO A SEPARATE SYSTEM BY OWNER IN ACCORDANCE WITH AS 3500 3 2003 AND BCA PART 3 1 2 3

RAINWATER TANKS WITH PUMPS TO SUPPLY GARDEN TAPS AND INTERNAL RE–USE AS PER BASIX ASSESSMENT

LEGEND

R L 0 00	NEW REDUCED LEVEL (NEW FINISHED GROUND LEVEL)
+ 00 00	EXISTING LEVEL
S L 0 00	SURFACE LEVEL
I L 0 00	INVERT LEVEL
T O W	TOP OF WALL LEVEL
G F L 0 00	GARAGE FLOOR LEVEL
F.F.L 0.00	FINISHED FLOOR LEVEL
A,B,C etc	SEE PIPE SCHEDULE
L1	PIPE LABEL
PIT P1	SURFACE INLET PIT
PIT OP1	OVERLAND FLOW PIT
–a– –a–	90mm AG LINE
DP	DOWNPIPE–SIZE
REFER TO NOTES FOR DP SIZE	
GP	GULLY PIT
GP	GARDEN GULLY PIT
O/F	OVERFLOW–200x100
RWH	RAIN WATER HEAD
SP	DP WITH SPREADER
BG	BALCONY GULLY PIT
CE	CLEANING EYE
	GROUND FALL
))))	100 HIGH EARTH MOUNDING

STORMWATER LAYOUT NOTES

–PITS UP TO 600 DEEP TO BE 450 x 450 U N O PITS UP TO 900 DEEP TO BE 600 x 600 U N O PITS UP TO 1200 DEEP TO BE 900 x 600 U N O PITS EXCEEDING 1200 DEEP TO BE 900 SQ U N O PITS TO BE PRECAST CONCRETE OR RENDERED BRICK WITH CONCRETE HEAVY DUTY GRATES U N O LIGHT DUTY PITS AND GRATES MAY BE USED ONLY IN LIGHT/FOOT TRAFFICABLE AREAS U N O ALL PITS TO BE BENCHED TO DISCHARGE PIPES U N O GAL STEP IRONS TO ALL PITS EXCEEDING 900 DEPTH
–COVER AND SUMP GRATES SHALL COMPLY WITH AS2733 & AS4198
–DOWNPIPES TO BE 90 DIA IF CHARGED AND 100 x 50 BOX IF GRAVITY U N O DP S SHALL BE INSTALLED IN ACCORDANCE WITH AS3500 3 2 4 11 & AS4198 MAX ROOF AREA PER DOWNPIPE IS 30SQM WITH A QUAD 115 HI–FRONT GUTTER U N O
–PIPES TO HAVE 1% MIN GRADE U N O BY PIT INVERTS PIPES TO BE V C CLASS X OR U P V C CLASS STORMWATER PIPE TO AS1254 1260 1273 1477 2179 2 AND WHERE EXPOSED TO DIRECT SUNLIGHT TO HAVE ADEQUATE PROTECTION TO U V RADIATION IN ACCORDANCE WITH AS2032 SEWER GRADE/GAL PIPES TO BE USED WHERE COUNCIL POLICY OR CONSENT REQUIRE SUCH
–GUTTER OUTLETS SHALL BE FITTED VERTICALLY TO THE SOLE OF THE EAVE GUTTERS RAINHEADS TO HAVE AN OVERFLOW DUCT OR WEIR 50mm BELOW THEIR CREST
–PROVIDE OVERFLOW SPITTERS TO ALL COVERED BALCONIES/ TERRACES NOT TO BE DIRECTED ON TO ROOF SURFACES
–RISING MAINS (PRESSURE PIPE) TO BE IN ACCORDANCE WITH AS3500 1 2
–SUBSOIL DRAINS TO BE IN ACCORDANCE WITH AS2439 1 CLASS 100 TO BE USED ONLY IN SINGLE DWELLINGS
–ALL PIPE JOINTS TO BE IN ACCORDANCE WITH AS3500 3 2 2 7
–ALL VALVES TO BE IN ACCORDANCE WITH AS3500 3 2
–EXPANSION JOINTS SHALL COMPLY WITH AS3500 3 2 TABLE 4 1 PVC JOINTS AND ACCESSORIES TO COMPLY WITH AS2179 2 & AS4198
–ALL TRENCHES TO BE IN ACCORDANCE WITH AS3500 3 2 7 2 8–14 EMBEDMENT MATERIAL AND TRENCH FILL TO ALL PIPES & SUBSOIL DRAINS TO BE IN ACCORDANCE WITH AS3500 3 2 7 ALL WORKS TO BE IN ACCORDANCE WITH AS1254 1741 2032 2733 2865 3996 1260 1477 2179 1 & 2 2566 6367 8301 ARR97 & BCA
–IT IS THE BUILDER S RESPONSIBILITY TO CONFIRM THAT LEVELS AND SURVEYS ARE IN ACCORDANCE WITH LEVELS ON SITE & ARE APPROVED BY COUNCIL & ARCHITECT BEFORE COMMENCING WORK
–NO SEWER VENTS GULLY PITS OR SIMILAR TO BE LOCATED BELOW THE MAXIMUM WATER SURFACE LEVEL IN DETENTION BASINS ALL BASIN WALLS TO BE WATERTIGHT & STRUCTURALLY DESIGNED BY A STRUCTURAL ENGINEER
–ALL FENCES WHICH MAY DIVERT FLOW FROM PROPOSED DIRECTION TO BE RAISED 100mm
–BUILDER TO ENSURE ALL DRAINAGE AREAS INCLUDING EXPOSED BALCONIES TO HAVE OVERFLOW MECHANISM IN PLACE IN THE EVENT OF BLOCKAGE WITH ADEQUATE OVERFLOW SECTION THROUGH PLANTERS PARAPETS ETC
–ALL EXTERIOR FINISHED GROUND LEVELS TO BE SLOPING AWAY FROM PERIMETER WALLS IN ALL CASES
–ALL HEADROOM CLEARANCES TO BE COORDINATED BETWEEN BUILDER & ARCHITECT NOTIFY ENGINEER FOR APPROVAL IF ANY CHANGES OCCUR
–ALL GULLY POSITIONS ARE DIAGRAMMATIC ONLY– BUILDER SHOULD CONSULT ARCHITECTURALS FOR DIMENSIONS TO LOCATE STORMWATER ELEMENTS U N O
–FIRE RATING TO ARCHITECT S SPECIFICATION
–ALL FINISHED FLOOR LEVELS ARE NOMINATFD BY ARCHITECT
–ALL SITE SAFETY MEASURES AND WORK METHOD STATEMENTS PREPARED BY BUILDER/SUB–CONTRACTORS ARE TO BE IMPLEMENTED DURING CONSTRUCTION NO WORK IS TO COMMENCE UNTIL ALL WORKERS CARRY OUT SITE INDUCTION PREPARED AND CARRIED OUT BY BUILDER ANY HAZARD IDENTIFICATION TO BE REPORTED IMMEDIATELY TO SITE SUPERVISOR TO CARRY OUT NECESSARY PROCEDURES TO ELIMINATE HAZARD PRIOR TO PROCEEDING WITH WORK STRUCTURAL AND GEOTECHNICAL ADVICE SHOULD BE SOUGHT IN ALL CASES
–CONFINED SPACES SIGNAGE TO BE INSTALLED IN ACCESSIBLE UNDERGROUND TANKS TO WORK COVER SPECIFICATIONS ALL PITS EXCEEDING 600mm DEPTH TO HAVE J BOLTS INSTALLED TO GRATES
–MAINTENANCE DEVICES REQ D BY AUTHORITIES ARE NOT TO BE ASSUMED SHOWN ON DRAWINGS

NORTH

REVISIONS

ISSUE	PRINTS	ISSUED TO	DATE
1	EMAIL	BUILDER/CLIENT	9–5–08

SCALE(A3) 1 200,100 u n o
SCALE BAR – 1m INTERVALS
DATE APRIL 2008
DRAWN M I
DESIGNED M I
APPROVED

IBRAHIM STORMWATER CONSULTANTS
CONSULTING CIVIL ENGINEERS
P O BOX 400 CHERRYBROOK NSW 2126
TELEPHONE (02) 9980 5515 FAX (02) 9980 6114
www stormwa er net au

PROJECT
PROPOSED RESIDENCE AT 28 HEATH STREET MONA VALE FOR MR & MRS CALLAGHAN.

THIS DRAWING
STORMWATER LAYOUT SH.1

BUILDER
CLARENDON HOMES

JOB NUMBER
C1420–03437

SHEET No
1 of 2

REVISION
.

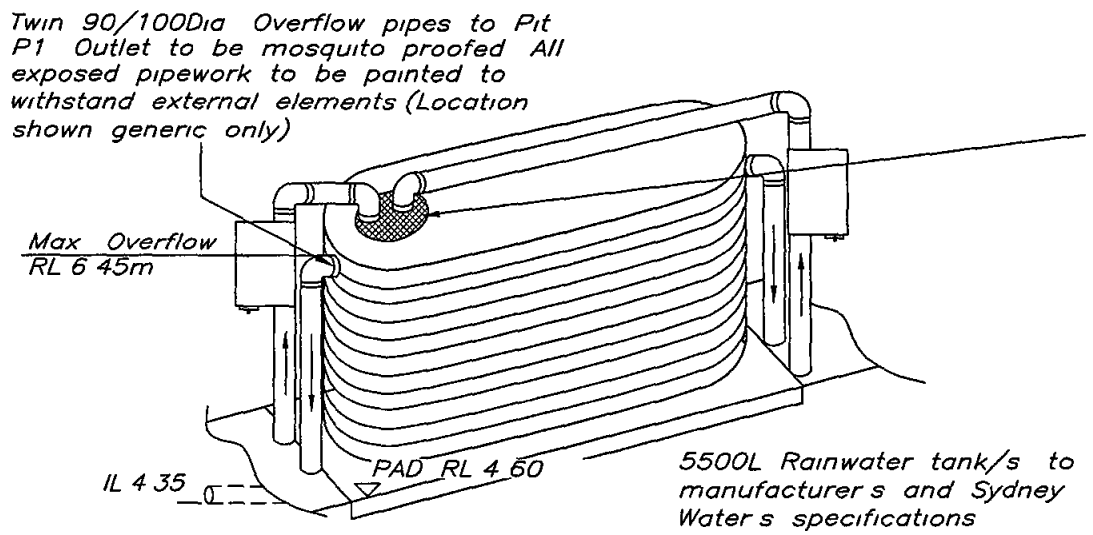

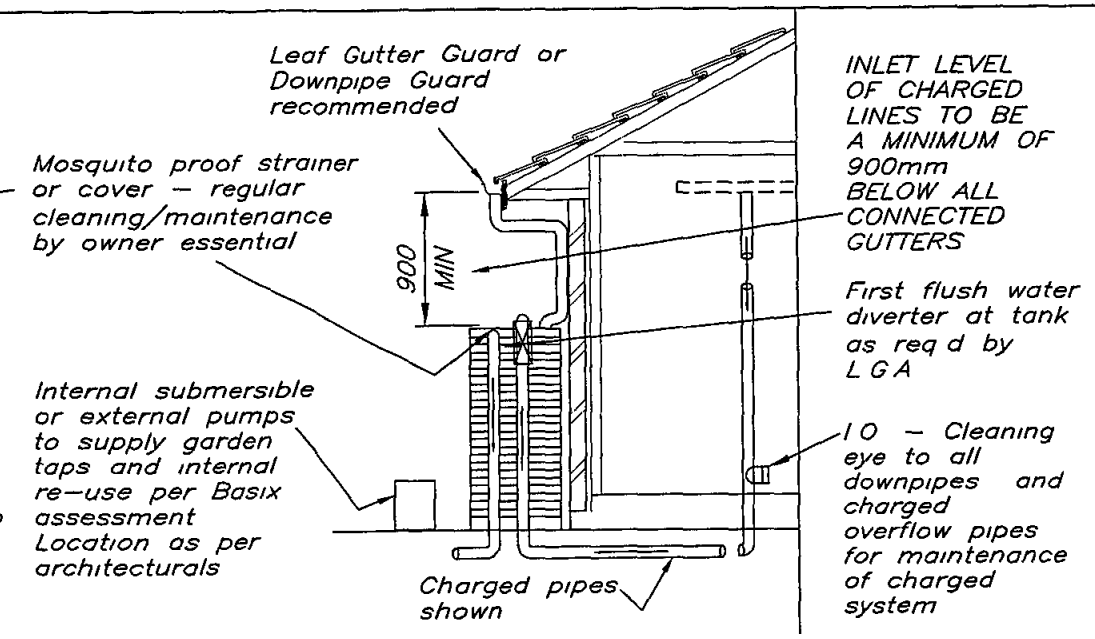

RAINWATER TANK

TANK DETAILS SHOWN ARE A SUGGESTED CONFIGURATION ONLY ANY MODIFICATIONS TO TANK VOLUME OR INLET AND OUTLET LEVELS MUST BE APPROVED BY ENGINEER PRIOR TO COMMENCEMENT OF CONSTRUCTION TANK SHAPE & DEVICES SHOWN ARE DIAGRAMMATIC ONLY MINIMUM OF 450 CLEARANCE (UNLESS L G A REQUIRES LARGER SETBACK) TO SIDE BOUNDARIES MUST BE MAINTAINED CLIENT IS RESPONSIBLE TO ENSURE COMPLIANCE WITH THIS IN THE INSTALLED STATE
Charged stormwater lines from Roof Areas ONLY to rainwater tank
All joints to be solvent welded All exposed pipework to be painted to withstand external elements
First flush water diverter at tank to comply with Sydney Water and council DCP's An approved switch system similar to Rainbank to be used via mains Pumps to manuf specs
Rain Tank to be installed and maintainted to manufacturers specifications and to comply with all Sydney Water Guidelines
Client to be responsible for maintenance system of charged pipelines Debris accumulation significantly affects systems performance Maintenance program essential
Structural details for tank base by manufacturer or others

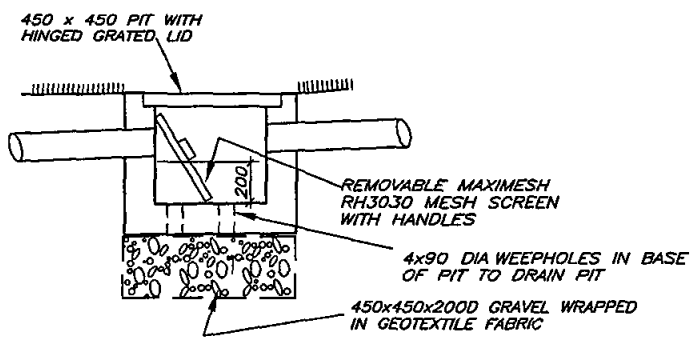

SILT ARRESTOR PIT – P1

BUILDER/CLIENT TO ENSURE THAT ALL SAFETY MEASURES ARE TAKEN DURING CONSTRUCTION INCLUDING BUT NOT LIMITED TO SAFETY FENCING SIGNAGE OBTAINING STRUCTURAL AND GEOTECHNICAL ADVICE WHERE EXCAVATIONS ARE NEAR STRUCTURES OR SERVICES SAFETY MEASURES RECOMMENDED BY PRODUCT SUPPLIERS ETC

REVISIONS

ISSUE	PRINTS	ISSUED TO	DATE
1	EMAIL	BUILDER/CLIENT	9–5–08

SCALE(A3) 1 200 100 uno
SCALE BAR – 1m INTERVALS
DATE APRIL 2008
DRAWN M I
DESIGNED M I
APPROVED

IBRAHIM STORMWATER CONSULTANTS
CONSULTING CIVIL ENGINEERS
P O BOX 400 CHERRYBROOK NSW 2126
TELEPHONE (02) 9980 5515 FAX (02) 9980 6114
www stormwater net au

PROJECT
PROPOSED RESIDENCE AT 28 HEATH STREET MONA VALE. FOR MR & MRS CALLAGHAN

THIS DRAWING
STORMWATER DETAILS SH 1
BUILDER
CLARENDON HOMES

JOB NUMBER
C1420–03437
SHEET No
2 of 2
REVISION

HATCHED AREA DENOTES
210 THICK INFILL SLAB
SL72 FABRIC TOP/BTM 25
COVER ON COMPACTED FILL

DENOTES ARTICULATION IN BRICKWORK

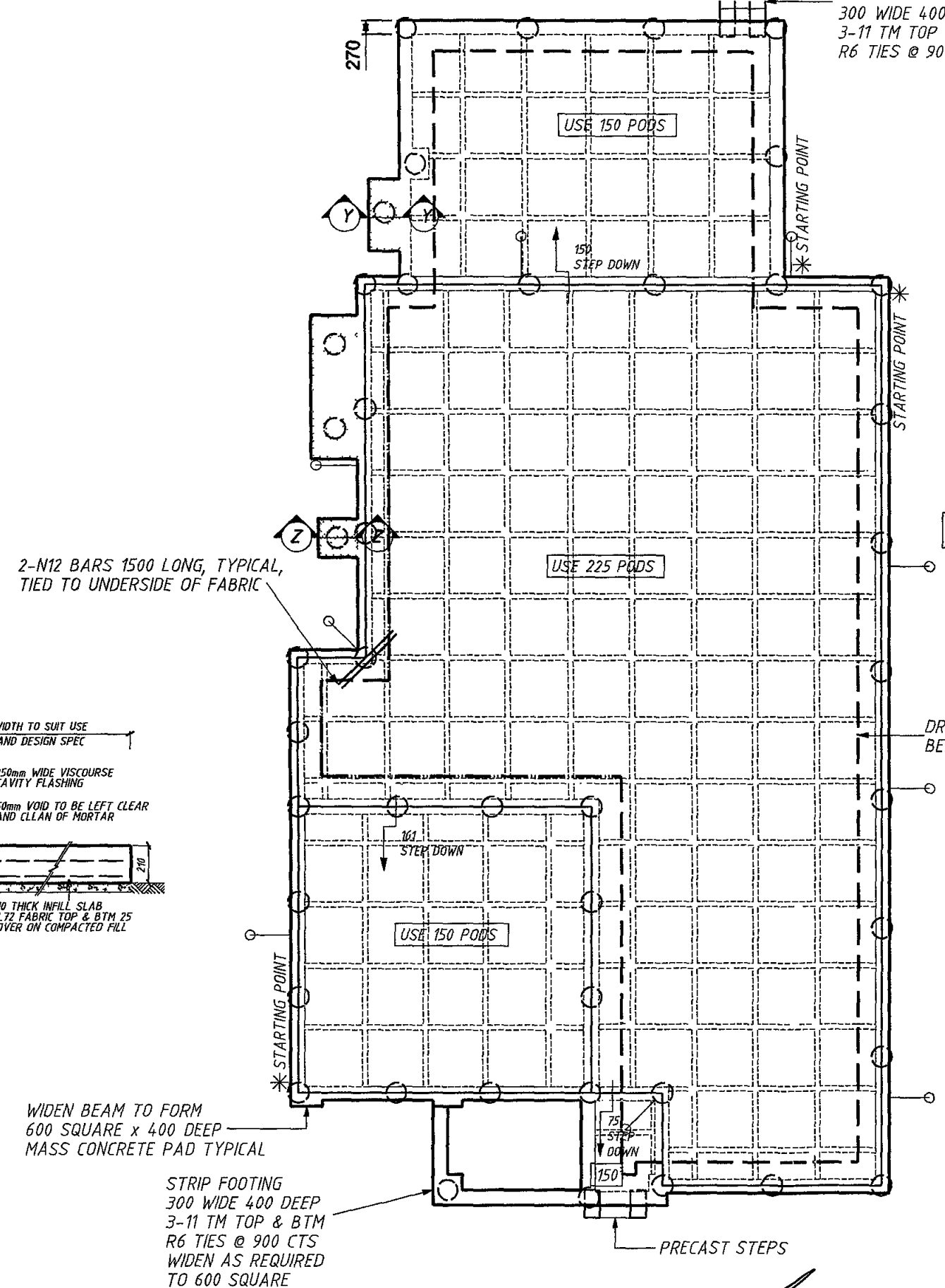

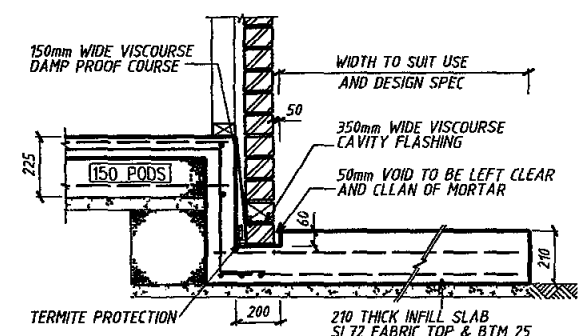

SECTION Y-Y

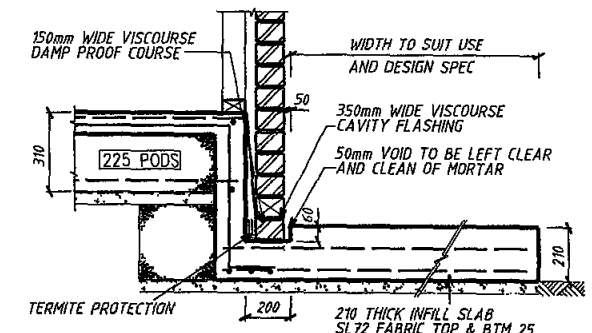

SECTION Z-Z

LOCAL CERTIFICATION SERVICES PTY LTD

RECEIVED

WAFFLE POD PLAN

This information relates to
Construction/Complying Development Certificate

5002360

Issued by Andrew Dean (02) 9836 5711
Building Professionals Board (BPB0087)

-ADDITIONAL PIERS IN THE CUT SECTION MAY BE REQUIRED TO ACHIEVE THE SAME BEARING AS PIERS IN THE FILL SECTION

NOTES
-OVERALL SLAB DIMENSIONS TO BE CHECKED AGAINST ARCHITECTURALS PRIOR TO COMMENCEMENT OF WORK
-270 RIBS UNDER LOAD BEARING WALL

GENERAL

THESE DRAWINGS TO BE READ IN CONJUCTION WITH ALL ARCHITECTURAL AND OTHER CONSULTANTS DRAWINGS AND SPECIFICATIONS
DIMENSIONS SHALL NOT BE OBTAINED BY SCALING THE STRUCTURAL DRAWINGS REFER TO ARCHITECTS FINAL DRAWINGS
BUILDER TO CHECK ALL RELEVANT DIMENSIONS ON SITE
ALL WORKMANSHIP AND MATERIALS TO BE IN ACCORDANCE WITH THE REQUIREMENTS OF RELEVANT AUSTRALIAN STANDARD CODES AND THE REGULATIONS OF THE RELEVANT BUILDING AUTHORITY
DURING CONSTRUCTION THE STRUCTURE SHALL BE MAINTAINED IN A STABLE CONDITION AND NO PART BE SHALL BE OVER STRESSED
THE BUILDER BE RESPONCIBLE FOR ANY DAMAGE TO THE WORKS DURING CONSTRUCTION

CONCRETE

CONCRETE SPECIFICATION (F'c 28 DAYS) TO BE FOLLOWS

LOCATION	CEMENT	Fc	MAX. AGG SIZE	SLUMP
PIERS	TYPE A	15 MPa	20	80
SLAB	TYPE A	20 MPa	20	80
STRIP FOOTINGS	TYPE A	25 MPa	20	80

CLEAR COVER TO REINFORCEMENT TO BE AS FOLLOW UNLESS NOTED OTHERWISE

LOCATION	FORMED & SHELTERED	FORMED & EXPOSED	POURED ON GROUND
SLABS & WALLS	20	30	65
BEAMS	25	40	65
COLUMNS	40	50	_

REINFORCEMENT SYMBOLS ARE FOLLOWS
(R) - STRUCTURAL GRADE ROUND BARS (250 r)
(N) - HOT ROLLED DEFORMED BARS (400 n)
(SL) HARD-DRAWN WIRE REINFORCING FABRIC (450 sl)
(S) - STRUCTURAL GRADE DEFORMED BARS

NO HOLES OR CHASES OTHER THAN THOSE SHOWN ON THE STRUCTURAL DRAWINGS TO BE MADE IN CONCRETE MEMBERS WITHOUT PRIOR APPROVAL OF THE ENGINEER
CONSTRUCTION JOINTS WHERE NOT SHOWN SHALL BE LOCATED TO THE APPROVAL OF THE ENGINEER
BEAM DEPTHS ARE GIVEN FIRST AND INCLUDE SLAB THICKESS
ALL REINFORCEMENT TO BE ADEQUATELY SUPPORTED IN ITS REQUIRED POSITION AND COVER DURING PLACEMENT OF CONCRETE
PIPES OR CONDUITS SHALL NOT BE PLACED WITHIN THE CONCRETE COVER TO REINFOREMENT WITHOUT THE APPROVAL OF THE ENGINEER
ALL CONCRETE TO BE MECHANICALLY VIBRATED AND SHALL BE CAREFULLY WORKED AROUND THE REINFORCEMENT AND INTO THE CORNERS OF FORMWORK
ALL CONCRETE SHALL BE CURED BY MOIST CURING BY CONTINUAL WETTING FOR AT LEAST 7 DAYS OR THE USE OF AN APPROVED CURING COMPOUND

FOUNDATIONS

FOOTINGS ARE DESIGNED FOR AN ALLOWABLE BEARING PRESURE OF 100 kPa
PIER HOLES ARE DESIGNED FOR ALLOWABLE BEARING PRESSURE OF 200 kPa
FOUNDATION MATERIAL SHALL BE APPROVED PRIOR TO CONSTRUCTION

ADDITIONAL

SITE TO BE STRIPPED OF ALL ORGANIC MATTER AND ASSOCIATED TOPSOIL
ALL SITE FILLING PLACED BENEATH RAFT SLAB TO BE TREATED IN ACCORDANCE WITH CLAUSE 6.4 OF AS 2870.2 1996
A 1 METRE WIDE APRON WITH 25 CROSS FALL AWAY FROM SLAB EDGE IS TO BE FORMED ALL AROUND THE RAFT SLAB WHERE APPLICABLE
RAFT SLAB TO BE LAID ON 50mm THICKESS OF CONSOLIDATED SAND COVERED WHERE PLATFORM IS NOT LEVEL, UNLESS NOTED OTHERWISE WITH 0 2mm THICK POLYTHENE VAPOUR BARRIER WITH ALL JOINTS PROPERLY LAPPED AND TAPED AT PENETRATIONS
ADDITIONAL CONCRETE PIERS MAY BE REQUIRED UNDER SLAB TO EVEN BEARING IN SOIL AS RECOMMENDED BE AUSTRALIAN STANDARD AS 2870
IF THE LOCATION OF THE SLAB IS NEXT TO AN ABOVE OR BELOW ON SITE DETENTION SYSTEM OR BELOW GROUND RAINWATER TANK, THE BUILDER IS TO ADVISE ENGINEER IN ORDER TO ENSURE THE CONCRETE PIERS ARE DRILLED 500mm BELOW INVERT LEVEL OF TANK OR THE FOOTING OF THE SUPPORTING WALL FOR AN ABOVE GROUND DETENTION SYSTEM

DESIGNED TO AS 2870

RAFELETOS
ACN 079047466
LEVEL 2, 103 VANESSA STREET
KINGSGROVE NSW 2208
PO BOX 161 KINGSGROVE NSW 2208

ENGINEERS CONSULTING

ZANUTTINI Pty Ltd
TELEPHONE (02) 9554 9311
FASCILIMILE (02) 9554 9764
DX 11392 HURSTVILLE NSW

BE MIE AUST

CLARENDON HOMES

2990 3437

CONCRETE SLAB DETAIL PLAN

CLIENT	CALLAGHAN				
LOCATION	LOT 22, NO 28 HEATH STREET MONA VALE				
DRAWN BY	AR	SCALE	1 100	SHEET No	1
ISSUE	A	DATE	12/5/08	JOB No	29563CL

NOTE N12 BARS CAN BE REPLACED WITH 10 65mm HDW (450MPa STRESS GRADE)

PIERING NOTES

-NO PIERS ARE NECESSARY WHEN BEAMS ARE BEARING ON NATURAL OR CONTROLLED FILL EXCEPT WHEN WITHIN THE ZONE OF INFLUENCE OF SEWER OR STORMWATER LINES

-BEAMS TO BE FOUNDED OR PIERED TO AN EVEN BEARING

-SPACE PIERS AT 2400 CTS UNDER ALL FXTERNAL & INTERNAL LOAD BEARING BEAMS AND PADS WHEN CONSTRUCTED ON UNCONTROLLED/ NON COMPACTED MATERIAL 400 DIA TO CLAY AND SAND OR 300 DIA TO ROCK AND SHALE

-PIERS REQUIRED UNDER INTERNAL RIB BEAMS WHEN CONSTRUCTED ON MORE THAN 300mm OF UNCONTROLLED/NON COMPACTED MATERIAL INTERNAL PIER SPACING 2400 x 2400 CENTRES

-PROVIDE ADDITIONAL 1-N12 BAR TOP OVER PIERED EXTERNAL AND INTERNAL BEAMS AND RIBS

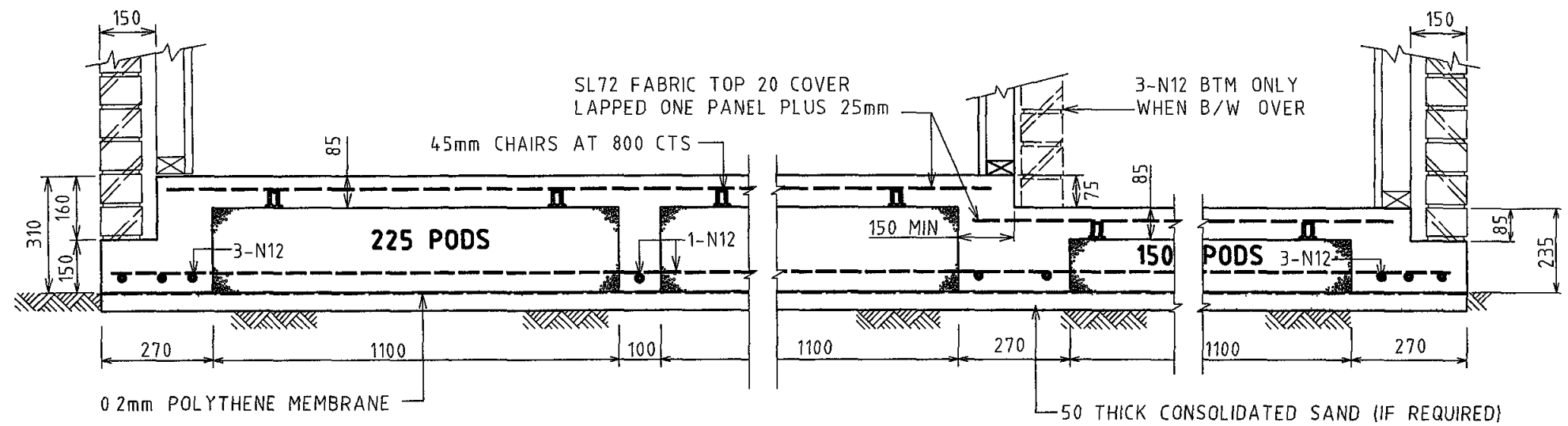

EDGE BEAM **INTERNAL RIB** **STEP DOWN DETAIL** **GARAGE EDGE BEAM**

REINFORCEMENT FOR RIBS AND BEAMS (U N O)		
WIDTH	TOP STEEL	BTM STEEL
111-270	-	2-N12
271-330	1-N12	3-N12
331-440	2-N12	4-N12
441-550	3-N12	5-N12
551-660	4-N12	6-N12

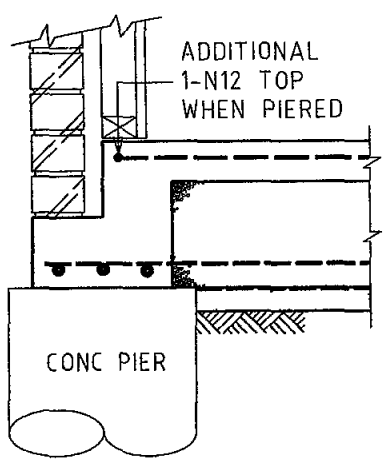

TYPICAL PIERING DETAIL

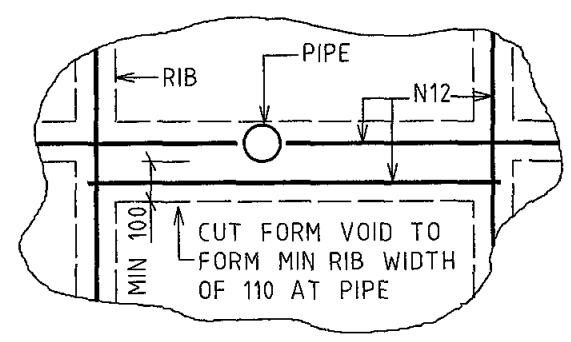

PIPE PENETRATION THROUGH RIB

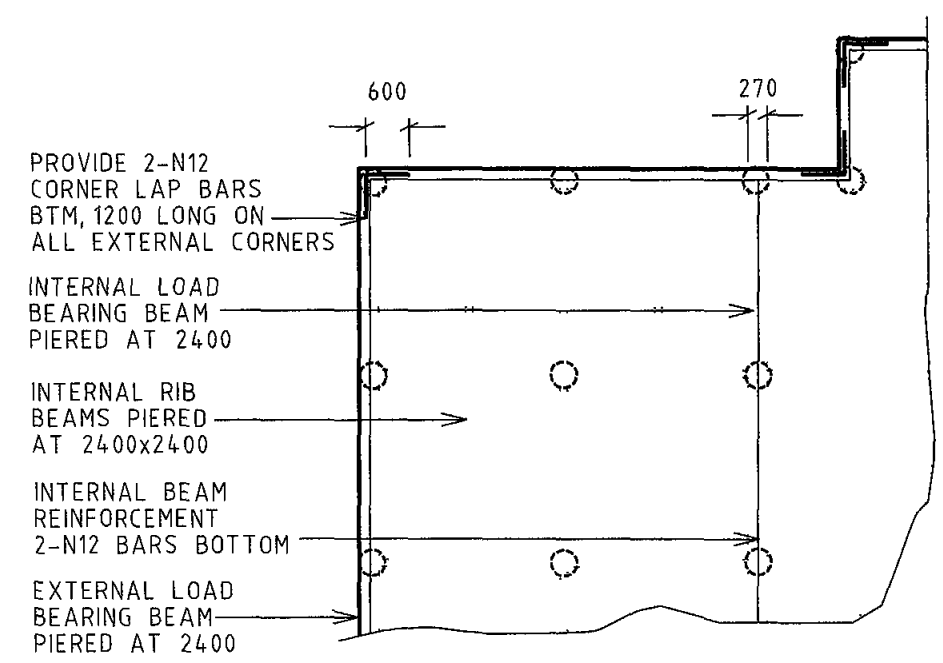

RAFELETOS ZANUTTINI Pty Ltd
CONSULTING ENGINEERS
ACN 079047466
LEVEL 2, 103 VANESSA STREET
KINGSGROVE NSW 2208
PO BOX 161 KINGSGROVE NSW 2208
TELEPHONE (02) 9554 9311
FASCILIMILE (02) 9554 9764
DX 11392 HURSTVILLE NSW
BE MIE AUST

CLARENDON HOMES

STRUCTURAL DETAIL PLAN

CLIENT	CALLAGHAN				
LOCATION	LOT 22, NO 28 HEATH STREET MONA VALE				
CLASSIFICATION	M	SCALE	1 100	SHEET No	2
ISSUE	A	DATE	12/5/08	JOB No	29563CL

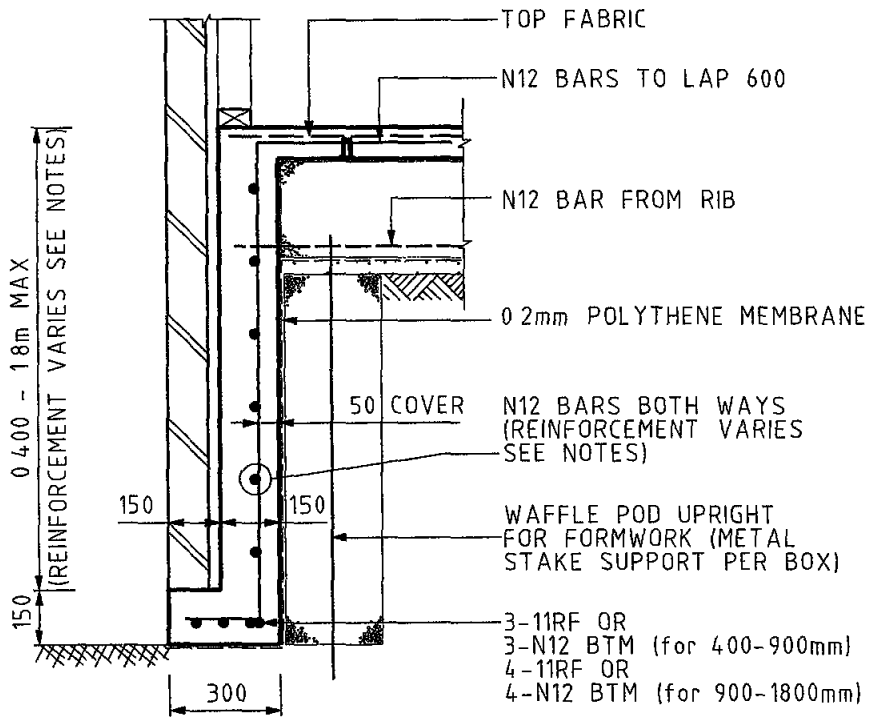

EXTERNAL DEEP BEAM

DEEP BEAM DEPTH	BEAM REINFORCEMENT
400 - 900mm	N12 BARS AT 600 CENTRES & 1-N12 CENTRALLY
900 - 1500mm	N12 BARS AT 300 CENTRES BOTH WAYS
1500 - 1800mm	N12 BARS AT 200 CENTRES BOTH WAYS

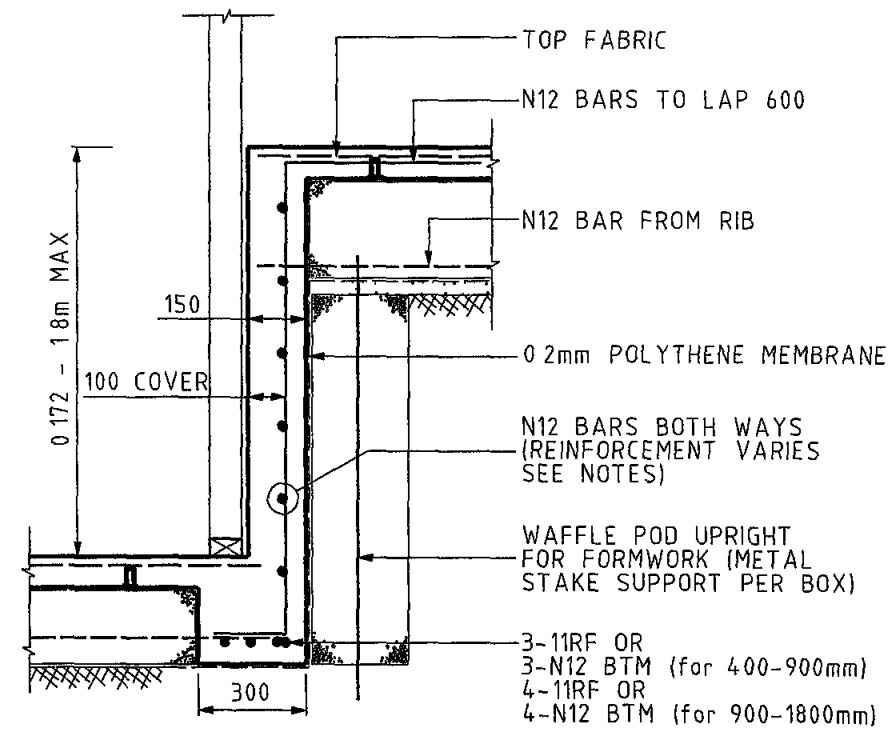

INTERNAL DEEP BEAM

DEEP BEAM DEPTH	BEAM REINFORCEMENT
172 - 400mm	N12 BARS AT 1200 CENTRES & 1-N12 HORIZONTAL
400 - 900mm	N12 BARS AT 600 CENTRES & 1-N12 CENTRALLY
900 - 1500mm	N12 BARS AT 300 CENTRES BOTH WAYS
1500 - 1800mm	N12 BARS AT 200 CENTRES BOTH WAYS

RAFELETOS ZANUTTINI Pty Ltd
ACN 079047466
LEVEL 2, 103 VANESSA STREET
KINGSGROVE NSW 2208
PO BOX 161 KINGSGROVE NSW 2208
TELEPHONE (02) 9554 9311
FASCILIMILE (02) 9554 9764
DX 11392 HURSTVILLE NSW
BE MIE AUST

CLARENDON HOMES

STRUCTURAL DETAIL PLAN

CLIENT	CALLAGHAN				
LOCATION	LOT 22, NO 28 HEATH STREET MONA VALE				
DRAWN BY	AR	SCALE	1 100	SHEET No	3
ISSUE	A	DATE	12/5/08	JOB No	29563CL

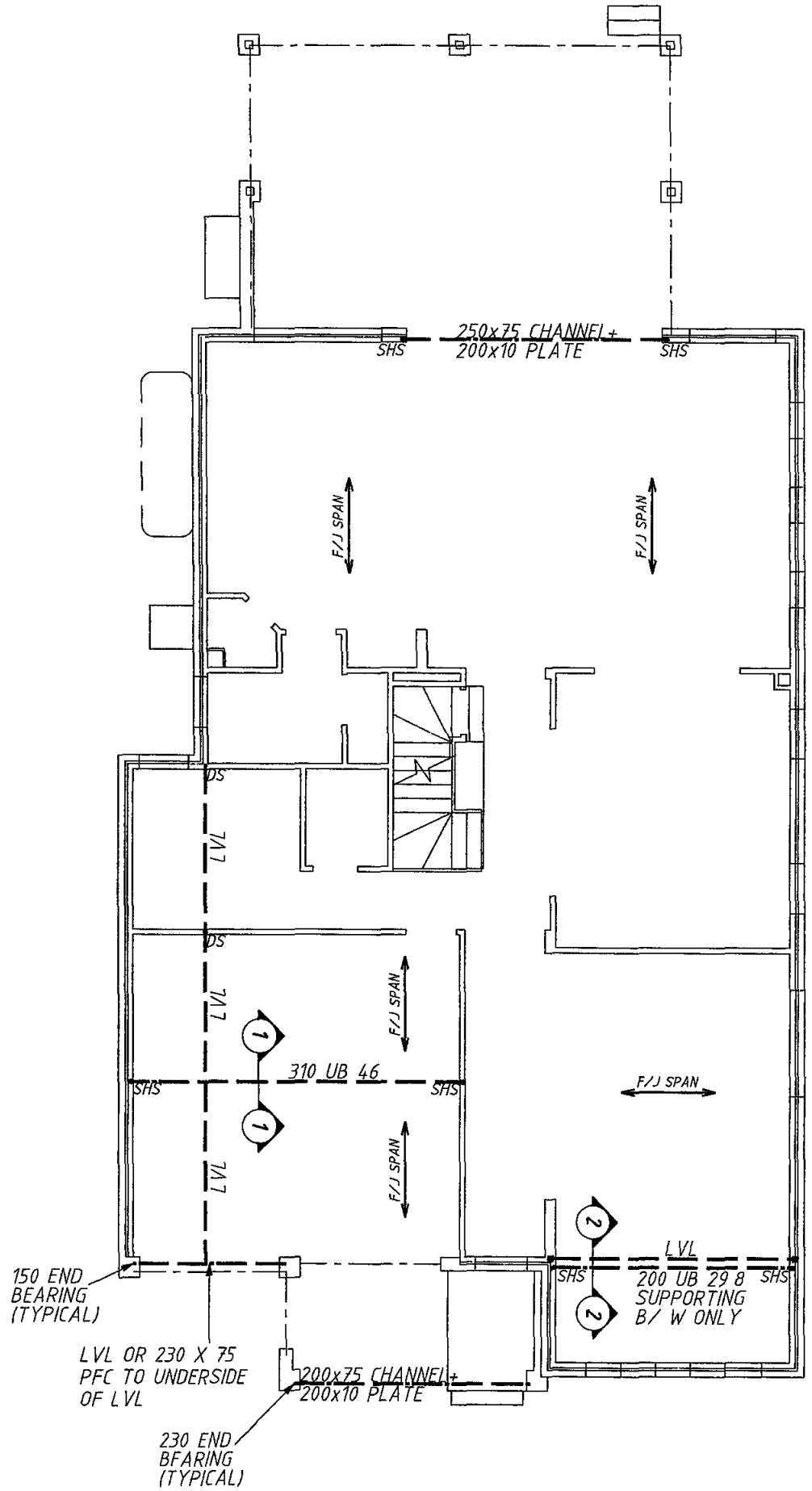

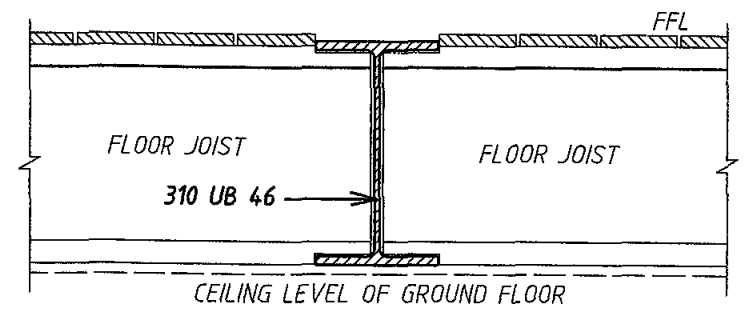

SECTION 1-1

SCALE 1:10

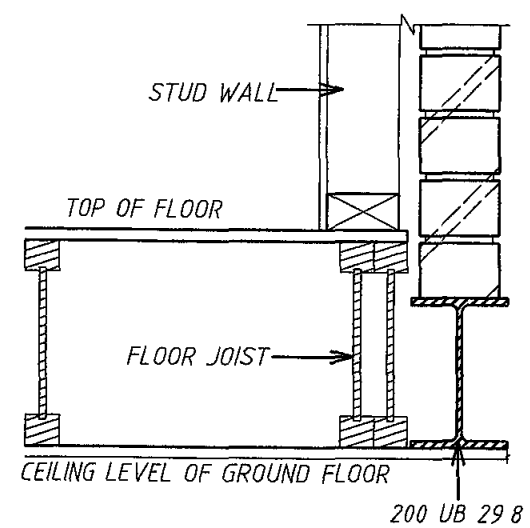

SECTION 2-2

SCALE 1:10

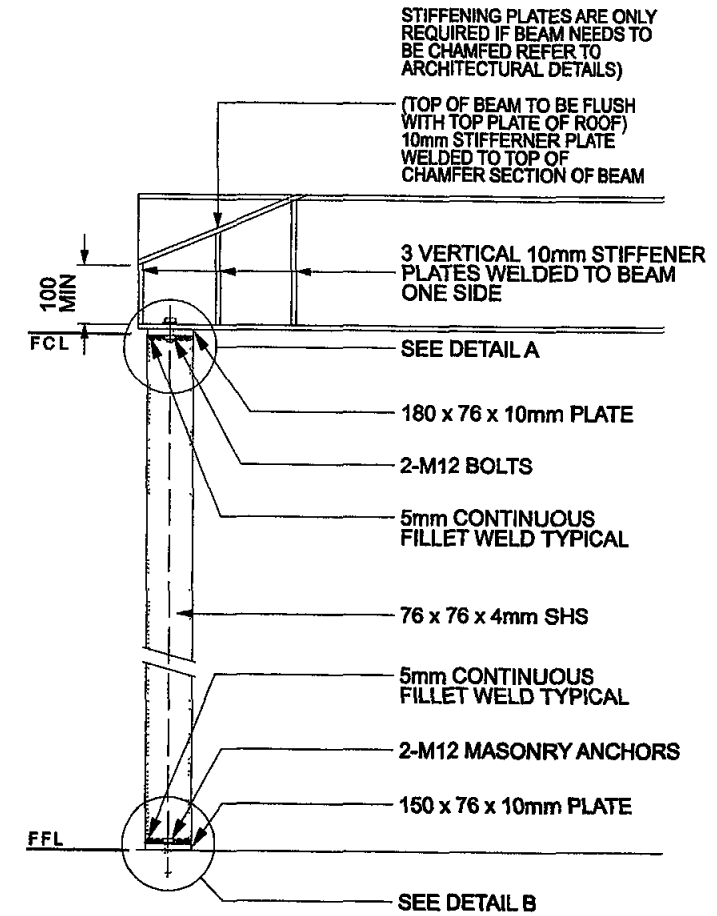

TYPICAL SECTION

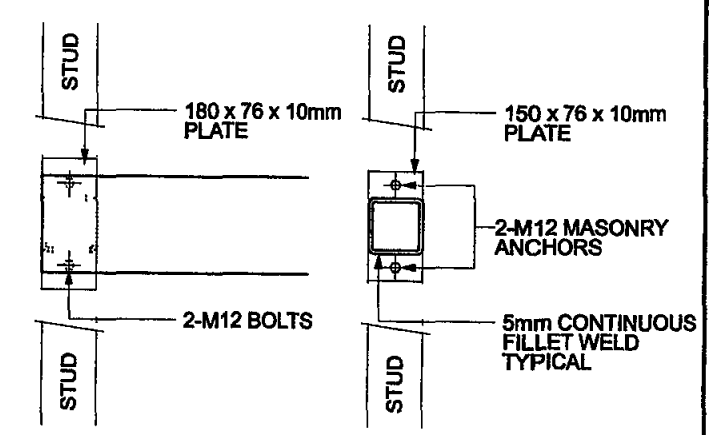

DETAIL A DETAIL B

NOTE

- ALL STEELWORK TO BE PAINTED WITH AN APPROVED CORROSIVE RESISTANT PRIMMER

NOTE IF BUILDING IS LOCATED WITHIN 1 0 KM OF THE COAST ENGINEER IS BE NOTIFIED AND STEEL BEAMS ARE TO BE GALVANISED

SHS DENOTES SQUARE HOLLOW SECTION OR STEEL POST ALL POST TO BE 76 x 76 x 4mm SHS BUILD POST INTO STUD FRAMEWORK

DS DENOTES DOUBLE 90 x 90 HARDWOOD STUDS

RAFELETOS ZANUTTINI Pty Ltd
ACN 079047466
LEVEL 2, 103 VANESSA STREET
KINGSGROVE NSW 2208
PO BOX 161 KINGSGROVE NSW 2208
TELEPHONE (02) 9554 9311
FASCILIMILE (02) 9554 9764
DX 11392 HURSTVILLE NSW
BE MIE AUST

CLARENDON HOMES

STRUCTURAL STEEL DETAIL PLAN

CLIENT	CALLAGHAN				
LOCATION	LOT 22, NO 28 HEATH STREET MONA VALE				
DRAWN BY	AR	SCALE	1 100	SHEET No	4
ISSUE	A	DATE	12/5/08	JOB No	29563CL

General Housing Specifications

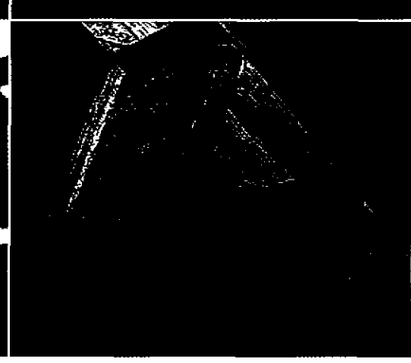

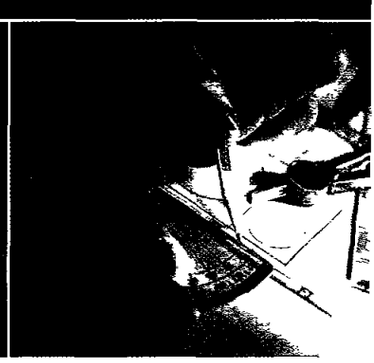

ADDRESS OF PROPERTY LOT 22, 28 HEATH AVENUE MONA VALE

GENERAL HOUSING SPECIFICATIONS BETWEEN

OWNER WAYNE & DEBORAH CALLAGHAN

AND

CONTRACTOR CLARENDON

CONTRACTOR LICENCE NO 22982

INDEX
GENERAL HOUSING SPECIFICATION
(NSW version revised June 2008)

1 0 INTRODUCTION

1 1 General

This Specification details the works to be executed and the materials to be used in carrying out those works at the site

This Specification shall be read as a general specification only The extent of the works shall be governed by the approved plans and other requirements under the contract

Any works not fully detailed shall, where appropriate, be sufficiently performed if carried out in accordance with the relevant manufacturer's recommendations or Engineer's Recommendations, and the Building Code of Australia (BCA)

1 2 Preliminary Use

This Specification forms part of the contract and should be read in conjunction with the other contract documents

1 3 Prevailing Documents

Where there is a difference between the plans and this specification, the plans will take precedence The Contractor must at all times maintain a legible copy of the plans and this Specification bearing the approval of the relevant Local Authority

1 4 Size and Dimensions

All sizes and dimensions given in this Specification are in millimetres unless otherwise stated and are nominal only

1 5 Prime Cost and Provisional Sum Items

Prime cost items and provisional sum items are listed in the Schedule of Works

1 6 Definitions

In this Specification

"Engineer's Recommendations" includes any soil classification report, preliminary footing report, construction footing report and any other report, recommendation, site or other instruction, calculations or plans prepared by an engineer in respect of the works

Where the words "Local Authority" are mentioned they shall mean the local council, or other governing authority or private certifier with statutory responsibility for the compliance of the work performed

Where referred to in this Specification, "regulations" shall mean the building regulations and codes (including the BCA, as amended) statutorily enforceable at the time application is made for a construction certificate or other permits, consents or approvals relating to the contract

Unless the context suggests otherwise, terms used in this Specification shall have the same meaning as in the HIA NSW Residential Building Contract between the Owner and the Builder ("contract")

This information relates to
Construction/Complying Development Certificate

5002360

Issued by Andrew Dean (02) 9836 5711
Building Professionals Board (BPB0087)

Initials /

2 0 STATUTORY REQUIREMENTS

2 1 The Building Works

The building works shall be constructed in accordance with

a the regulations and in particular the Performance Requirements of the BCA Housing Provisions Volume 2,
b any conditions imposed by the relevant development consent or complying development certificate,
c commitments outlined in the relevant BASIX Certificate,

in so far as the Builder is required in accordance with the Schedule of Works addended to this Specification

2 2 Compliance with Requirements of Authorities

The Builder is to comply with the requirements of all legally constituted authorities having jurisdiction over the building works and the provisions of the Home Building Act

2 3 Electricity

Where there is no existing building, the Builder is to make arrangements for any electrical power to be used in the construction of the building works and is to pay fees and costs incurred therein The cost of providing and installing any additional poles, wiring, service risers or underground wiring etc , as may be required by the electricity supply authority, shall be borne by the Owner

2 6 Sanitary Accommodation

Prior to the commencement of the building works, unless toilet facilities exist on the site, the Builder shall provide temporary toilet accommodation for the use of subcontractors Where the Local Authority requires the temporary toilet to be connected to sewer mains, the additional cost of this work shall be borne by the Owner On completion the Builder shall remove the convenience

3 0 OWNER'S OBLIGATIONS

3 1 Engineer's Recommendations

If the contract so indicates, the Owner shall, at the Owner's expense, provide the Builder with reports and recommendations (including soil classification) as to the foundations or footings requirements for the building works prepared by an engineer

In these circumstances, if the Builder instructs any party to provide such recommendations, the Builder does so only as agent for the Owner

3 3 Trades Persons Engaged by Owner

The Owner shall not engage or employ any tradesperson, trade-contractor or any other person to work on the site without the consent of the Builder whose consent may be subject to such terms and conditions as the Builder may stipulate

3 4 Items Supplied by Owner

For all items referred to in this Specification to be supplied by the Owner, it is the responsibility of the Owner to arrange payment for delivery of and protection against damage and theft of all these items

3 5 Water Supply

Where there is no existing building on the site, the Owner shall, at the Owner's expense, supply adequate water to the site for construction purposes Unless otherwise specified, the Builder shall pay the standard water meter connection fee to the water supply authority provided this service is prelaid to the site ready for use The Owner shall be responsible for any fee to be paid in excess of the standard water meter connection fee

3 6 Sanitation

Unless otherwise specified

(a) the Owner shall, at the Owner's expense, supply sewerage connection riser or common effluent drainage connection riser on the site,
(b) the Builder shall pay the standard sewer connection fee to the sewerage supply authority provided this service is prelaid to the site and ready for use, and
(c) the Owner shall be responsible for any fee to be paid in excess of the standard sewer connection fee

4 0 PLANS, PERMITS AND APPLICATION FEES

4 1 Permits and Fees

Subject to a contrary requirement under the contract, the Builder shall lodge all necessary application notices plans and details with the Local Authority for approval prior to commencement of construction

4 2 Mines Subsidence

In areas affected by mines subsidence the appropriate authority is to be consulted and any work carried out in accordance with the authority's requirements

4 3 Setting Out

The Builder shall accurately set out the building works in accordance with the site plan and within the boundaries of the site

5 0 EXCAVATIONS

5 1 Excavations

The part of the site to be covered by the proposed building or buildings and an area at least 1000mm wide around that part of the site or to the boundaries of the site, whichever is the lesser shall be cleared or graded as indicated on the site works plan

Top soil shall be cut to a depth sufficient to remove all vegetation

Excavations for all footings shall be in accordance with the Engineer's Recommendations and BCA Volume 2, Housing Provisions, Part 3 2 2

6 0 FOUNDATIONS AND FOOTINGS

6 1 Underfloor Fill

Underfloor fill shall be in accordance with BCA Volume 2, Housing Provisions, Part 3 2 2 or Performance Requirements P2 1, P2 2 3 and Clause 1 0 10

Termite treatment shall be carried out in accordance with BCA Volume 2, Housing Provisions, Part 3 1 3 or Performance Requirement P2 1 and Clause 1 0 10

6 3 Vapour Barrier

The underfloor vapour barrier shall be 0 2 mm nominal thickness, high impact resistance polyethylene film installed in accordance with BCA Volume 2, Housing Provisions Part 3 2 2 or Performance Requirements P2 1, P2 2 3 and Clause 1 0 10

6 4 Reinforcement

Reinforcement shall conform and be placed in accordance with the Engineer's Recommendations and BCA Volume 2, Housing Provisions, Part 3 2 3 or Performance Requirements P2 1 and Clause 1 0 10

Support to all reinforcement shall be used to correctly position and avoid any undue displacement of reinforcement during the concrete pour

6 5 Concrete

Structural concrete shall not be less than Grade N20 except where otherwise approved by the engineer and in accordance with BCA Volume 2, Housing Provisions, Part 3 2 3 or Performance Requirements P2 1 and Clause 1 0 10

Pre-mixed concrete shall be manufactured in accordance with AS 1379 with delivery dockets kept on site and available for inspection by the engineer

Concrete shall be placed and compacted in accordance with good building practice

6 6 Curing

All concrete slabs shall be cured in accordance with AS 3600

6 7 Footings and Slabs on Ground

Concrete slabs and footings shall not be poured until approval to pour concrete is given by the engineer or the Local Authority

NOTE Bench levels and floor levels on the site works plan shall be regarded as nominal, unless specified otherwise

6 8 Suspended Slabs

All concrete slabs, other than those supported on solid ground or properly compacted filling, shall be constructed as suspended slabs These slabs shall be constructed in accordance with the Engineer's Recommendations

6 9 Foundation Walls

On footings as previously specified build brick walls to the thickness shown on plan to level underside of floor bearers or plates

6 10 Sub- Floor Ventilation

Provide adequate cross ventilation to the space under suspended ground floor No section of the under floor area wall to be constructed in such a manner that will hold pockets of still air and to meet with the requirements of BCA, Volume 2, Housing Provisions, Part 3 4 1 or Performance Requirement P2 2 3 and Clause 1 0 10

6 11 Sub-Floor Access

Provide access under suspended floors in position where indicated on plan

7 0 RETAINING WALLS

7 1 Retaining Walls

Where the Builder is required by the Schedule of Works addended to this Specification, the Builder shall construct retaining walls as shown on the approved plans Where a retaining wall is not included in the Schedule of Works, the construction of the retaining wall shall be the responsibility of the Owner

8 0 EFFLUENT DISPOSAL/DRAINAGE

8 1 Effluent Disposal/Drainage

In both sewered and unsewered areas, fit bath, wash basin, kitchen, wash tubs, pedestal pan and floor grate to shower recess in positions shown on plan (refer to Schedule of Works) Provide waste pipes with traps to the above fittings and connect to the drainage system The whole of the work to be performed in accordance with the rules and requirements of the sewerage authority concerned

8 2 Septic System

Provide and install a septic system where applicable to the requirements of the Local Authority and in accordance with the manufacturer's recommendations

8 3 Storm Water Drainage

Stormwater drainage shall be carried out in accordance with BCA, Volume 2, Housing Provisions, Part 3 1 2 or Performance Requirement P2 2 1 and Clause 1 0 10

Allow for the supplying and laying of stormwater drains where shown on the site plan

9 0 TIMBER FRAMING

9 1 Generally

All timber framework sizes, spans, spacing, notching, checking and fixing to all floor, wall and roof structures shall comply with BCA, Volume 2, Housing Provisions, Part 3 4 3 or Performance Requirement P2 1 and Clause 1 0 10 or AS 1684 Alternative structural framing shall be to structural engineer's details and certification

The work shall be carried out in a proper and tradesperson like manner and shall be in accordance with recognised and accepted building practices

9 2 Floor Framing

All floors not specified to be concrete are to be framed at the level shown Span and spacing of bearers is to conform to the requirements of the span tables for the appropriate member size Deep joists to upper floors, where shown, are to be fitted with solid blocking or herringbone strutting as required All sizes and stress grades of timber members and tie down methods are to be in accordance with AS 1684

9 3 Wall Framing

Plates may be trenched to provide uniform thickness where studs occur Where plates are machine gauged to a uniform thickness, trenching may be omitted Wall framing is to be erected plumb and straight and securely fastened to floor framing Provide a clear space of 40mm between outer face of wall frame and inner face of brick veneer walls Tie brickwork to studs with approved veneer ties Ties are to slope downwards towards the veneer wall

Studs in each panel of walling shall be stiffened by means of solid noggings or bridging pieces at not more than 1350 mm centres over the height of the wall Bottom plates shall be fixed to the floor structure in accordance with AS 1684

9 4 Heads Over Opening (Lintels)

All sizes, stress grade and bearing area shall conform to AS 1684 Heads exceeding 175 mm in depth shall be seasoned or a low shrinkage timber species used Plywood web lintels conforming to the requirements of the Plywood Association of Australia may be used Glue laminated beams conforming to AS 1328 or, laminated veneer lumber beams to manufacturer's specification and data sheets may be used

9 5 Roof Trusses

Where roof truss construction is used, trusses shall be designed in accordance with AS 1720 and fabricated in a properly equipped factory and erected, fixed and braced in accordance with the fabricator's written instructions

9 6 Bracing

Bracing units shall be determined and installed in accordance with AS 1684 as appropriate for the design wind velocity for the site Bracing shall be evenly distributed throughout the building

9 7 Flooring

Cover floor joists with strip or sheet flooring as shown on plan with particular regard to ground clearance and installation in wet areas as required by the BCA Thickness of flooring to be appropriate for the floor joist spacing

Strip and sheet flooring shall be installed in accordance with AS 1684

When listed in Schedule of Works floors shall be sanded to provide an even surface and shall be left clean throughout

9 8 Roof Framing

Roofs are to be pitched to the slope shown on plan Provide tie-down as required for the appropriate design wind speed and roof covering Provide all rafters, ridges, hips, valleys, purlins, struts, collar ties and wind bracing as appropriate with all sizes and stress grades in accordance with AS 1684

Metal fascias shall be installed in accordance with the manufacturer's recommendations and shall meet the requirements of AS 1684

9 9 Timber Posts

Posts supporting carports, verandas and porches shall be timber suitable for external use, or as otherwise specified, supported on galvanised or treated metal post shoes unless otherwise specified Post shall be bolted to all adjoining beams as required by AS 1684 for the wind speed classification assessed for the site

9 10 Corrosion Protection

All metal brackets, facing plates and other associated fixings used in structural timber joints and bracing must have appropriate corrosion protection

9 11 Hot Water Storage Tank Platforms

Where a hot water storage tank is to be installed in the roof space, the tank platform shall be supported directly off the wall plates and must not be supported on ceiling joists Where installed in the roof space the storage tank shall be fitted with an appropriate spill tray and overflow drain pipe

Where a hot water storage tank is supported by the roof structure the structure shall be specifically designed to support all imposed loads

10 0 STEEL FRAMING

10 1 Generally

Steel floor wall or roof framing shall be installed in accordance with the manufacturer's recommendations and BCA, Volume 2, Housing Provisions, Part 3 4 2 or Performance Requirement P2 1 and Clause 1 0 10

11 0 ROOFING

All roof cladding to comply with the relevant structural performance and weathering requirements of BCA, Volume 2 Housing Provisions Part 3 5 1 or Performance Requirements P2 1, P2 2 2 and Clause 1 0 10 and be installed as per the manufacturer's recommendations

11 1 Tiled Roofing

Cover the roof of the dwelling with approved tiles as selected The tiles are to be fixed as required for the appropriate design wind speed to battens of sizes appropriate to the spacing of rafters/trusses in accordance with manufacturer's recommendations Cover hips and ridges with capping and all necessary accessories including starters and apex caps Capping and verge tiles are to be well bedded and neatly pointed Roofing adjacent to valleys should be fixed so as to minimise water penetration as far as practicable As roof tiles are made of natural products slight variation in colour is acceptable

11 2 Metal Roofing

Provide and install a metal roof together with accessories all in accordance with the manufacturer's recommendations

Except where design prohibits, sheet shall be in single lengths from fascia to ridge Fixings of sheet shall be strictly in accordance with the manufacturer's recommendations as required for the appropriate design wind speed Incompatible materials shall not be used for flashings, fasteners or downpipes

11 3 Gutters and Downpipes

Gutters and downpipes shall be manufactured and installed in accordance with BCA, Volume 2, Housing Provisions, Part 3 5 2 or Performance Requirement P2 2 1 and Clause 1 0 10 Gutters and downpipes are to be compatible with other materials used

11 4 Sarking

Sarking under roof coverings must comply and be fixed in accordance with AS/NZS 4200 1 for materials and AS/NZS 4200 2 for installation

11 5 Sealants

Appropriate sealants shall be used where necessary and in accordance with manufacturer's recommendations

11 6 Flashing

Flashings shall comply with, and be installed in accordance with BCA, Volume 2, Housing Provisions, Part 3 3 4 or Performance Requirement P2 2 2 and Clause 1 0 10

12 0 MASONRY

12 1 Bricks

All clay bricks and brickwork shall comply with AS 3700 and BCA, Volume2, Housing Provisions Part 3 3 or Performance Requirement P2 1 and Clause 1 0 10 Clay bricks are a natural kiln fired product and as such their individual size may vary

Tolerances shall only be applied to the total measurements over 20 units, not to the individual units

12 2 *Concrete Blocks*

Concrete blocks are to be machine pressed of even shape, well cured and shall comply with AS 3700 Concrete blockwork shall be constructed in accordance with BCA, Volume 2, Housing Provisions, Part 3 3 or *Performance Requirement P2 1 and Clause 1 0 10*

Autoclaved aerated concrete blocks shall be in accordance with the manufacturer's product specification at the time the work is being carried out

12 3 Damp Proof Courses

All damp proof courses shall comply with BCA, Volume 2, Housing Provisions, Part 3 3 4 or Performance Requirement P2 2 2 and Clause 1 0 10 The damp proof membrane shall be visible in the external face of the masonry member in which it is placed and shall not be bridged by any applied coatings, render or the like

12 4 Cavity Ventilation (Weep Holes)

Open perpendicular joints (weepholes) must be created in the course immediately above any DPC or flashing at centres not exceeding 1 2m and be in accordance with BCA, Volume 2, Housing Provisions, Part 3 3 4 or Performance Requirement P2 2 2 and Clause 1 0 10

12 5 Mortar and Joining

Mortar shall comply with BCA, Volume 2, Housing Provisions, Part 3 3 1 or Performance Requirement 2 1 and Clause 1 0 10 Joint tolerances shall be in accordance with AS 3700

12 6 Masonry Accessories

Masonry accessories shall comply with BCA, Volume 2, Housing Provisions, Part 3 3 3 or Performance Requirement P2 1 and Clause 1 0 10 and accepted building practices Wall ties to meet corrosion resistant rating appropriate for the exposure conditions of the site Provide appropriate ties to articulated joints in masonry

12 7 Lintels

Lintels used to support brickwork opening in walls must be suitable for the purpose as required by BCA, Volume 2, Housing Provisions, Part 3 3 3 or Performance Requirement P2 1 and Clause 1 0 10 Provide one lintel to each wall leaf Provide corrosion protection in accordance with BCA Part 3 4 4 as appropriate for the site environment and location of the lintels in the structure

12 8 Cleaning

Clean all exposed brickwork with an approved cleaning system Care should be taken not to damage brickwork or joints and other fittings

13 0 CLADDING AND LININGS

13 1 External Claddings

Sheet materials or other external cladding shall be fixed in accordance with the manufacturer's recommendations and any applicable special details

Where required in open verandas, porches and eaves soffits, material indicated on the plans shall be installed

13 2 Internal Wall and Ceilings Linings

Provide gypsum plasterboards or other selected materials to walls and ceilings Plasterboard sheets to have recessed edges and be a minimum of 10mm thick Internal angles in walls from floor to ceiling to be set Suitable cornice moulds shall be fixed at the junction of all walls and ceilings or the joint set as required The lining of wet area walls shall be constructed in accordance with BCA, Volume 2, Housing Provisions, Part 3 8 1 or Performance Requirement P2 4 1 and Clause 1 0 10 Wet area lining is to be fixed in accordance with the manufacturer's recommendations

The ceiling access hole shall be of similar material to the adjacent ceiling

13 3 Waterproofing

All internal wet areas and balconies over internal habitable rooms to be waterproofed in accordance with BCA, Volume 2, Housing Provisions, Part 3 8 1 or Performance Requirement P2 4 1 and Clause 1 0 10

14 0 JOINERY

14 1 General

All joinery work (metal and timber} shall be manufactured and installed according to accepted building practices

14 2 Door Frames

External door frames shall be a minimum of 32 mm thick solid rebated 12 mm deep to receive doors Internal jamb linings shall be a minimum of 18 mm thick fit with 12 mm thick door stops Metal door frames shall be installed where indicated on drawings in accordance with the manufacturer's recommendations

14 3 *Doors and Doorsets*

All internal and external timber door and door sets shall be installed in accordance with accepted building practices Unless listed otherwise in the Schedule of Works doors and door sets shall be manufactured in accordance with AS 2688 and AS 2689

14 4 Window and Sliding Doors

Sliding and other timber windows and doors shall be manufactured and installed in accordance with AS2047

Sliding and other aluminium windows and doors shall be installed in accordance with manufacturer's recommendations and AS2047

All glazing shall comply with BCA, Volume 2, Housing Provisions Part 3 6 or Performance Requirements P2 1, P2 2 2 and Clause 1 0 10 and any commitments outlined in the relevant BASIX Certificate

14 5 Architraves and Skirting

Provide architraves and skirting as nominated on the plans or listed in the Schedule of Works

14 6 Cupboards/Kitchens/Bathroom

Units shall be installed to manufacturer's recommendations Bench tops shall be of a water resistant material

14 7 Stairs, Balustrades and other Barriers

Provide stairs or ramps to any change in levels, and balustrades or barriers to at least one side of ramps, landings and balconies as per BCA, Volume 2, Housing Provisions, Part 3 9 1 or Performance Requirement P2 5 1 and Clause 1 0 10 for stair construction and Part 3 9 2 or Performance Requirements P2 1, P2 5 2 and Clause 1 0 10 for balustrades

15 0 SERVICES

15 1 Plumbing

All plumbing shall comply with the requirements of the relevant supply authority and AS 3500 The work is to be carried out by a licensed plumber
Fittings as listed in the Schedule of Works shall be supplied and installed to manufacturer's recommendations
Fittings, hot water system and any rainwater harvesting facilities shall be appropriate to satisfy any commitment outlined in the relevant BASIX Certificate

15 2 Electrical

Provide all labour and materials necessary for the proper installation of electricity service by a licensed electrician in accordance with AS/NZS 3000 and the requirements of the relevant supply authority Unless otherwise specified, the electrical service shall be 240 volt, single phase supply

15 3 Gas

All installation (including LPG) shall be carried out in accordance with the rules and requirements of the relevant supply authority

15 4 Smoke Detectors

Provide and install smoke alarms manufactured in accordance with AS 3786 as specified or as indicated on the plans and in accordance with BCA, Volume 2, Housing Provisions, Part 3 7 2 or Performance Requirement P2 3 2 and Clause 1 0 10

15 5 Thermal Insulation

Where thermal insulation is used in the building fabric or services, such as air conditioning ducting or hot water systems it shall be installed in accordance with manufacturer's recommendations to achieve the R-Values required by BCA Part 3 12 1 to meet Performance Requirement NSW P2 6 1 (a) or as outlined in the relevant BASIX Certificate

16 0 TILING

16 1 Materials

Cement mortar and other adhesives shall comply with AS 3958 1 or tile manufacturer's recommendations

16 2 Installation

Installation of tiles shall be in accordance with AS 3958 1, manufacturer's recommendations or accepted building practices

Where practicable, spacing between tiles should be even and regular Provide expansion joints where necessary All vertical and horizontal joints between walls and fixtures e g bench top, bath, etc and wall/floor junctions to be filled with flexible mould resistant sealant All joints in the body of tiled surfaces shall be neatly filled with appropriate grout material as specified by the tile manufacturer or accepted building practice As tiles are made of natural products a slight variation in colour is acceptable

16 3 Walls

Cover wall surfaces where indicated on the drawings with selected tiles Tiles are to be fixed to the wall substrate with adhesives compatible with the substrate material Provide all required strips, vent tiles and recess fittings

16 4 Floors

Lay selected floor tiles in sand and cement mortar, or adhesive compatible with the substrate material, to areas indicated on the drawings Where required, fit approved edge strips or metal angle to exposed edges in doorways or hobless showers in wet areas in accordance with BCA, Volume 2, Housing Provisions, Part 3 8 1 or Performance Requirement P2 4 1 and Clause 1 0 10 Provide adequate and even fall to wastes where required

17 0 PAINTING

17 1 General

All paint used shall be of a quality suitable for the purpose intended and the application shall be as per the manufacturer's recommendations The colours used shall be as listed in the Schedule of Works or other relevant contract document All surfaces to be painted shall be properly prepared to manufacturer's recommendations

18 0 SIGNATURES

This is the Specification referred to in the contract No Date

Signed by the said Owner in the presence of

Witness Owner's Signature / / Date

Witness Owner's Signature / / Date

Signed by the said Builder in the presence of

Witness Builder's Signature / / Date