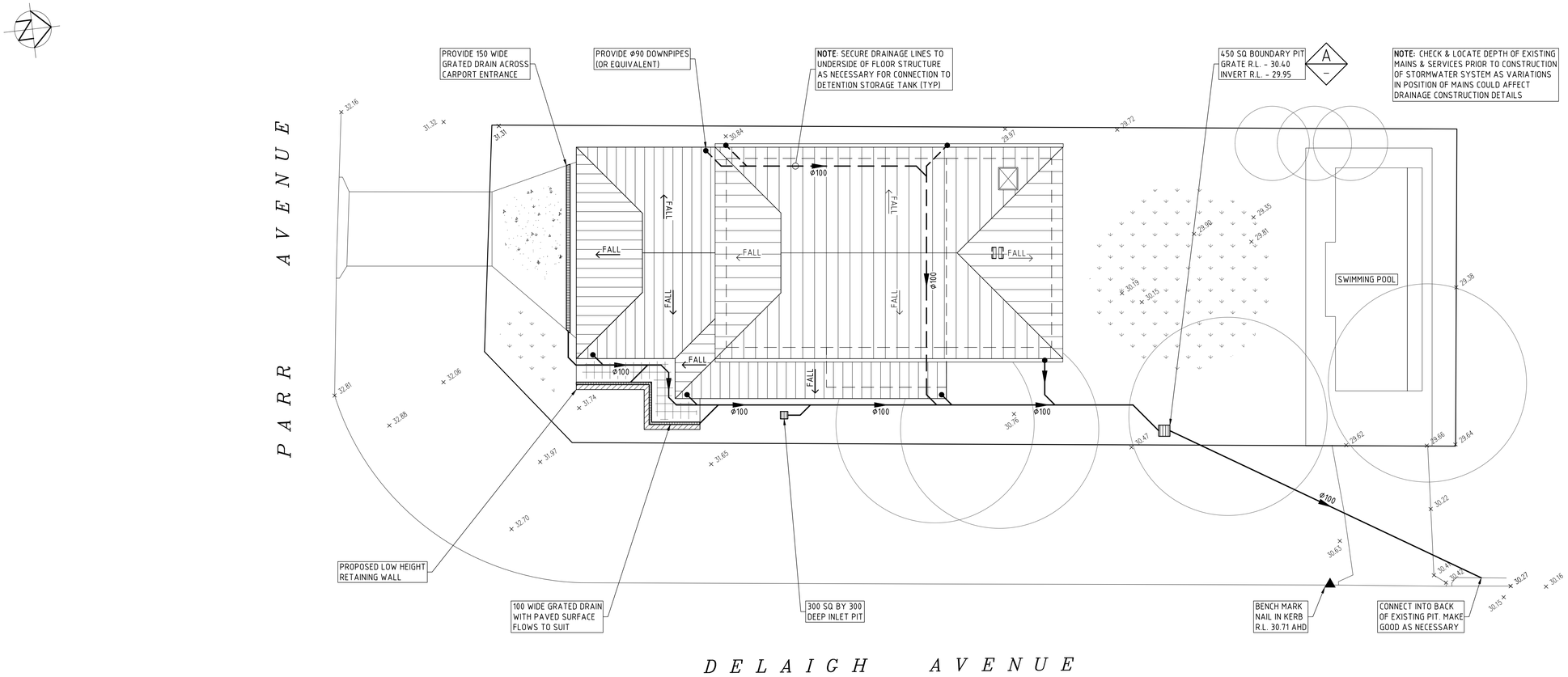

DRAINAGE NOTES

1. + DENOTES EXISTING GROUND LEVEL.
2. FALL STORMWATER PIPES AT 1% MIN. UNLESS OTHERWISE NOTED.
3. SUB-SOIL DRAINAGE TO BE CONNECTED TO THE SITE DRAINAGE SYSTEM AS NECESSARY.
4. SURFACE GRATES 450 SQ. UNLESS OTHERWISE NOTED.
5. ALL STORMWATER PIPES TO HAVE SOLVENT CEMENT WATERTIGHT JOINTS.
6. CHECK & LOCATE DEPTH OF EXISTING MAINS & SERVICES PRIOR TO CONSTRUCTION OF STORMWATER SYSTEM AS VARIATIONS IN POSITION OF MAINS COULD AFFECT DRAINAGE CONSTRUCTION DETAILS.
7. INSPECTIONS MUST BE UNDERTAKEN BY THIS OFFICE (BY PRIOR ARRANGEMENT WITH ENGINEER) DURING CONSTRUCTION TO ENABLE FULL CERTIFICATION UPON COMPLETION OF WORKS.
8. ALL CONSTRUCTION OF COUNCIL DRAINAGE WORKS TO COMPLY WITH COUNCIL STANDARD.
9. REMOVE REDUNDANT DRAINAGE PITS AND SEAL PIPES.
10. PIT BENCHING TO BE HALF THE OUTGOING PIPE DIAMETER. CONCRETE FOR BENCHING TO BE 20 MPa MASS CONCRETE.
11. APPROVED PRE-CAST PITS MAY BE USED.
12. ALL PIPES TO BE LAID ON COMPACTED FINE CRUSHED ROCK OR SAND BEDDING 75mm THICK & PIPES BACKFILLED WITH COMPACTED SAND TO 300mm ABOVE TOP OF PIPE, ELSE ATTACHED TO UNDERSIDE OF STRUCTURE AT 600mm c/c AS NECESSARY
13. PIPE ROUTES SHOWN ARE INDICATIVE ONLY AND SHOULD BE AS NECESSARY ACCORDING TO SITE CONDITIONS, TREE POSITIONS ETC. CONFIRM SIGNIFICANT CHANGES IN PIPES SYSTEM DETAILS WITH SUPERVISING ENGINEER PRIOR TO COMMENCEMENT OF DRAINAGE CONSTRUCTION WORKS.
14. CONTRACTOR SHALL ENSURE THAT SERVICES TO BUILDINGS NOT AFFECTED BY THE WORKS ARE NOT DISRUPTED. CONTRACTOR SHALL CONSTRUCT TEMPORARY SERVICES TO MAINTAIN EXISTING SUPPLY TO BUILDINGS WHERE REQUIRED. ONCE WORKS ARE COMPLETE AND COMMISSIONED THE CONTRACTOR SHALL REMOVE ALL TEMPORARY SERVICES AND MAKE GOOD ALL DISTURBED AREAS.
15. STORMWATER SYSTEM REQUIRES SIGNIFICANT MAINTENANCE DUE TO POTENTIAL HIGH POLLUTANT LOAD. FILTERS AND POLLUTANT TRAPS SHOULD BE CHECKED AFTER LARGE STORM EVENTS AND CLEANED EVERY 6 MONTHS.
16. PLUMBING AND DRAINAGE WORKS TO COMPLY WITH AS-3500, THE NATIONAL DRAINAGE & PLUMBING CODE.
17. WHERE POSSIBLE DRAINAGE LINES SHALL BE LAID IN AREAS PREVIOUSLY DISTURBED BY OTHER SITE WORKS AND FOLLOW TOPOGRAPHICAL FEATURES TO REDUCE IMPACT AND AVOID TREE ROOTS

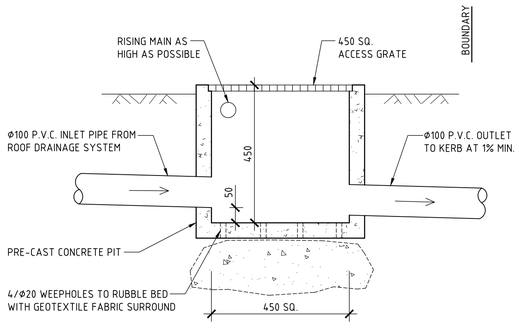

DETAIL A
SCALE 1:10

STORMWATER SYSTEM DESIGN DATA

SITE DATA

SITE AREA = 494 m^2 (100%)
PROPOSED IMPERVIOUS AREA = 266.5 m^2 (53%)
PROPOSED LANDSCAPED AREA = 227.5 m^2 (47%)
EXISTING IMPERVIOUS AREA = 152.4 m^2 (30%)
EXISTING LANDSCAPED AREA = 341.6 m^2 (70%)

ISSUE DATE	REVISION

TITLE
STORMWATER MANAGEMENT PLAN
49 PARR AVENUE, CURL CURL

DRAWN	DATE	CHECKED	SCALE @ A1
JBP	20 APRIL 2021	BE Civil (Hons) MIE Aust.	1:100 1:10

TAYLOR CONSULTING
CIVIL & STRUCTURAL ENGINEERS

DRAWING NO.
SHEET – 1/A

"Seascape" Suite 7 22-26 Fisher Rd Dee Why NSW 2099 | T 02 9982 7092 | F 02 9982 5898 | enquire@taylorconsulting.net.au | www.taylorconsulting.net.au