CONSTRUCTION CERTIFICATE APPLICATION

Made under the Environmental Planning and Assessment Act 1979 Sections 109C (1) (b), 81a (2) and 81a (4)

Pittwater Council

Unit 9/5 Vuko Place, Warriewood NSW 2102
PO Box 882, Mona Vale NSW 1660
Tel: (612) 9970 1111
Fax: (612) 9970 7150
Internet: www.pittwaterlga.com.au
Email: pittwater_council@pittwater.nsw.gov.au

SITE DETAILS

Unit/Suite:	Street No:	Street:
	12	JACKSON ROAD

Suburb:	Lot No:	Deposit /Strata Plan:
WARRIEWOOD	22	260277

DEVELOPMENT CONSENT

Development Application No:	Determination Date:
N 0767/04	14TH DEC. 2004

APPLICANT DETAILS

Name/Company:	Contact Person:
GM COMMUNICATIONS	ANDREW HOLLAND
Postal Address:	**Contact Numbers:**
10 b FLIGHT DRIVE TULLAMARINE VIC 3043	Phone (H/B): 03 9330 3922 Mobile: — Fax: 03 9330 3756
Signature of Applicant:	**Date:** 12/1/05

OWNERS DETAILS

Name:	If Company, contact person:
REFER DA FOR OWNER SIGN OFF DATED 27/9/04.	
Postal Address:	**Contact Numbers:**
	Phone (H/B):
	Mobile:
	Fax:

As the owner of the land to which this application relates, I consent to this application. I also give consent for the authorised Council Officer to enter the land to carry out inspections.

Signature of Owners:	Date:

If more than one owner, every owner must sign. If the owner is a company, the form must be signed by an authorised director and the common seal must be stamped on this application.
If the property has been recently purchased, written confirmation from the purchaser's Solicitor must be provided.
If the contracts have been exchanged for the purchase of the land, the current owner is to sign the application.

DEVELOPMENT DETAILS

Type of Work: ☑ Building Work

OR

☐ Subdivision Work

Description of proposal – (Provide brief, concise details):

INSTALLATION OF 1.2 M SATELLITE DISH & MOUNT TO THE ROOF OF WOOLWORTHS SHOPPING CENTRE. FOR THE PURPOSE OF 2 WAY SATELLITE COMMUNICATIONS.

WHO WILL BE DOING THE BUILDING WORKS?

☐ Owner Builder

Owner Builders Permit No: .....

Copy of Owner Builders permit attached: ☐ Yes ☐ No – to be provided with Notice of Commencement Form

If you are an Owner-Builder for the residential building work exceeding $5000 you must apply for a permit at NSW Office of Fair Trading, 1 Fitzwilliam Street, Paramatta NSW 2150 Australia. Tel: 61 2 98950111 Fax: 61 2 9895 0222.

OR

☐ Licensed Builder
Builder's License Number .....

Name of Builder: GM COMMUNICATIONS	Phone: 03 9330 3922
Contact person: ANDREW HOLLAND	Mobile:
Address: 10 b FLIGHT DRIVE	Fax: 03 9330 3756
TULLAMARINE VIC 3043	

Insurance Company: .....

Insurance Certificate attached: ☐ Yes ☐ No – to be provided with Notification of Commencement form

If you are using a licensed builder for residential building work exceeding $12,000 you must obtain Home Building Act Insurance. A certificate of insurance must be provided with this application or submitted with the Notification of Commencement form.

VALUE OF PROPOSED DEVELOPMENT

Value of Works: $ 600-00 (including full cost of labour and materials)

DO YOU NEED TO PAY THE BUILDING INDUSTRY LONG SERVICE LEVY?

☐ Yes ☑ No

Only required if the development involves building works exceeding $25,000.00.

OFFICE USE ONLY

Fee Type	Cashier's Code	Fee Amount
Construction Certificate Application Fee	TCER	
Long Service Levy Fee	QLSL	
Driveway/Street Levels	ESTR	
Sec 94 Contributions		
Bonds/Guarantees		
Other Fees		
TOTAL		
Date of Receipt:	**Receipt No:**	**Accepted By:**

PRIVACY AND PERSONAL INFORMATION PROTECTION NOTICE

Purpose of collection:	To enable Council as the consent authority to assess your proposal.
Intended recipients	Council Staff and any other relevant government agency that may be required to assess the proposal.
Supply:	The information is required by legislation.
Consequence of Non-provision:	Your application may not be accepted, not processed or rejected for lack of information
Storage:	The Pittwater Council will store details of the application and any subsequent decision in a register that can be viewed by the public.
Retention period:	Hard copies of the application will be destroyed after 7 years and electronic records will be kept indefinitely.

Please contact Council if this information you have provided is incorrect or changes.

STATISTICAL RETURN FOR AUSTRALIAN BUREAU OF STATISTICS

What is the area of the land?	Area in square metres	
Gross floor area of existing building? *If no existing building, write "NIL"*	Area in square metres	
What is the existing building or site used for at present?	Main uses: ..... Other uses:	
Does the site contain a dual occupancy?	❑ Yes	❑ No
Gross floor area of proposed building?	Proposed floor area in square metres.....	
What will the proposed building to be used for?	Main uses: ..... Other uses:	
How many dwellings:		
Are pre-existing at this property?	Dwellings:	
Are proposed to be demolished?	Dwellings:	
Are proposed to be constructed?	Dwellings:	
How many storeys will building consist of?	Storeys:	
What are the main building materials?		

Walls		**Roof**	
Full Brick	❑	Aluminium	❑
Brick veneer	❑	Concrete or slate	❑
Concrete, masonry	❑	Tile	❑
Steel	❑	Fibrous cement	❑
Fibrous cement	❑	Steel	❑
Timber/weatherboard	❑	Other	❑
Cladding-aluminium	❑	Unknown	❑
Curtain glass	❑		
Other	❑		
Unknown	❑		

Floor		**Frame**	
Concrete	❑	Timber	❑
Timber	❑	Steel	❑
Other	❑	Other	❑
Unknown	❑	Unknown	❑

Alex [illegible] Associates

[illegible]

[illegible]

[illegible] Mar[illegible]
[illegible]
[illegible]
EAST [illegible]

[illegible]

[illegible]

RE: VSAT MOUNTING BRACKET

[illegible] the [illegible] the mou[illegible] [illegible] [illegible] Standard [illegible]

[illegible] Loading Code [illegible]
[illegible] Loading Code, [illegible]
Category [illegible] Exposure [illegible]
Steel Str[illegible]

[illegible] as detailed below will [illegible]

[illegible]
[illegible]
[illegible] lengths [illegible] with [illegible] screws

[illegible]
Alex M[illegible] Associates [illegible]
[illegible]

[illegible]

Alex [illegible] Associates

[illegible]

[illegible] Seote [illegible]

[illegible]
[illegible]
[illegible]
EAST BRISBANE [illegible]

[illegible]

[illegible]

RE: VSAT MOUNTING BRACKET

[illegible] line drawing [illegible] following [illegible] standard

[illegible] SAA Loading Code
[illegible] SAA Loading Code Wind [illegible]
[illegible] Category [illegible] exposure W41
[illegible] Field Strength [illegible]

[illegible] as detailed below will [illegible]

[illegible]
[illegible]
[illegible] screws

[illegible]
Alex Milanovic & Associates
[illegible]

[illegible]

[illegible]

Alex [illegible] Associates

[illegible]

[illegible]

[illegible]

[illegible]

[illegible]

[illegible]

[illegible]

RE: VSAT MOUNTING BRACKET

[illegible] the design of the [illegible] following Australian Standards

[illegible]	[illegible]	SAA Loading Code
[illegible]	[illegible]	SAA Loading Code Wind Load
		Category [illegible]
[illegible]	[illegible]	Steel Structures

[illegible] as detailed below will [illegible]

[illegible]

[illegible]

[illegible]

Yours [illegible]

Alex Milan[illegible] & Associates

[illegible]

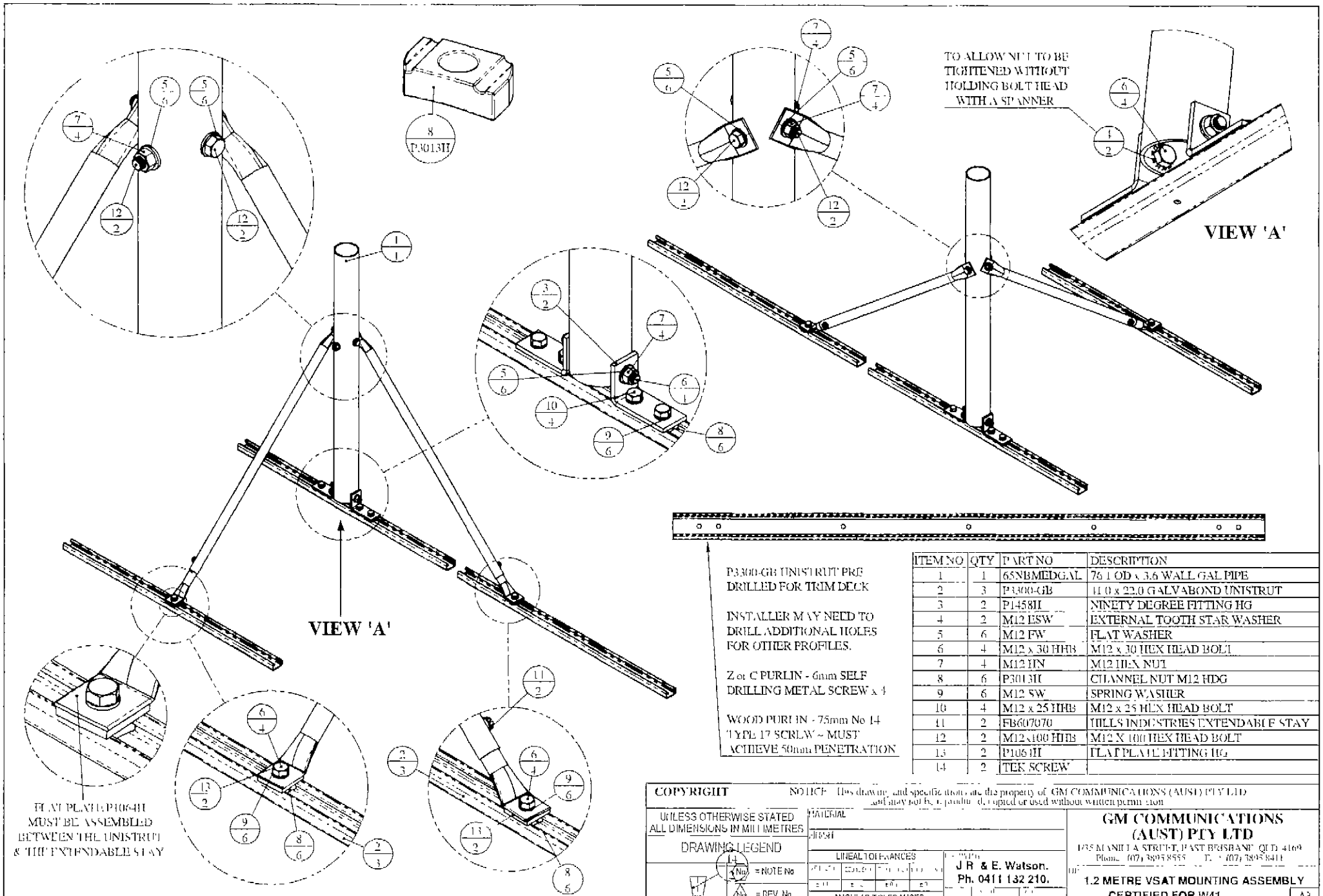

ITEM NO	QTY	PART NO	DESCRIPTION
1	1	65NBMEDGAL	76.1 OD x 3.6 WALL GAL PIPE
2	3	P3300-GB	41.0 x 22.0 GALVABOND UNISTRUT
3	2	P1458H	NINETY DEGREE FITTING HG
4	2	M12 ESW	EXTERNAL TOOTH STAR WASHER
5	6	M12 FW	FLAT WASHER
6	4	M12 x 30 HHB	M12 x 30 HEX HEAD BOLT
7	4	M12 HN	M12 HEX NUT
8	6	P3013H	CHANNEL NUT M12 HDG
9	6	M12 SW	SPRING WASHER
10	4	M12 x 25 HHB	M12 x 25 HEX HEAD BOLT
11	2	FB607070	HILLS INDUSTRIES EXTENDABLE STAY
12	2	M12x100 HHB	M12 X 100 HEX HEAD BOLT
13	2	P1064H	FLAT PLATE FITTING HG
14	2	TEK SCREW	

COPYRIGHT NOTICE This drawing and specification are the property of GM COMMUNICATIONS (AUST) PTY LTD and may not be reproduced or used without written permission

UNLESS OTHERWISE STATED ALL DIMENSIONS IN MILLIMETRES

DRAWING LEGEND

(No) = NOTE No

(No) = REV No

(No) - ITEM No

MATERIAL

FINISH

LINEAR TOLERANCES

ANGULAR TOLERANCES

J R & E. Watson.
Ph. 0411 132 210.

JHW 01.02.04

SHEET 1 OF 1

GM COMMUNICATIONS (AUST) PTY LTD
135 MANILLA STREET, EAST BRISBANE QLD 4169
Phone (07) 3895 8555 Fax (07) 3895 8411

1.2 METRE VSAT MOUNTING ASSEMBLY CERTIFIED FOR W41

W41

A3 SCALE 1:10

REV	CHANGE DESCRIPTION	BY	DATE	CKD	DATE

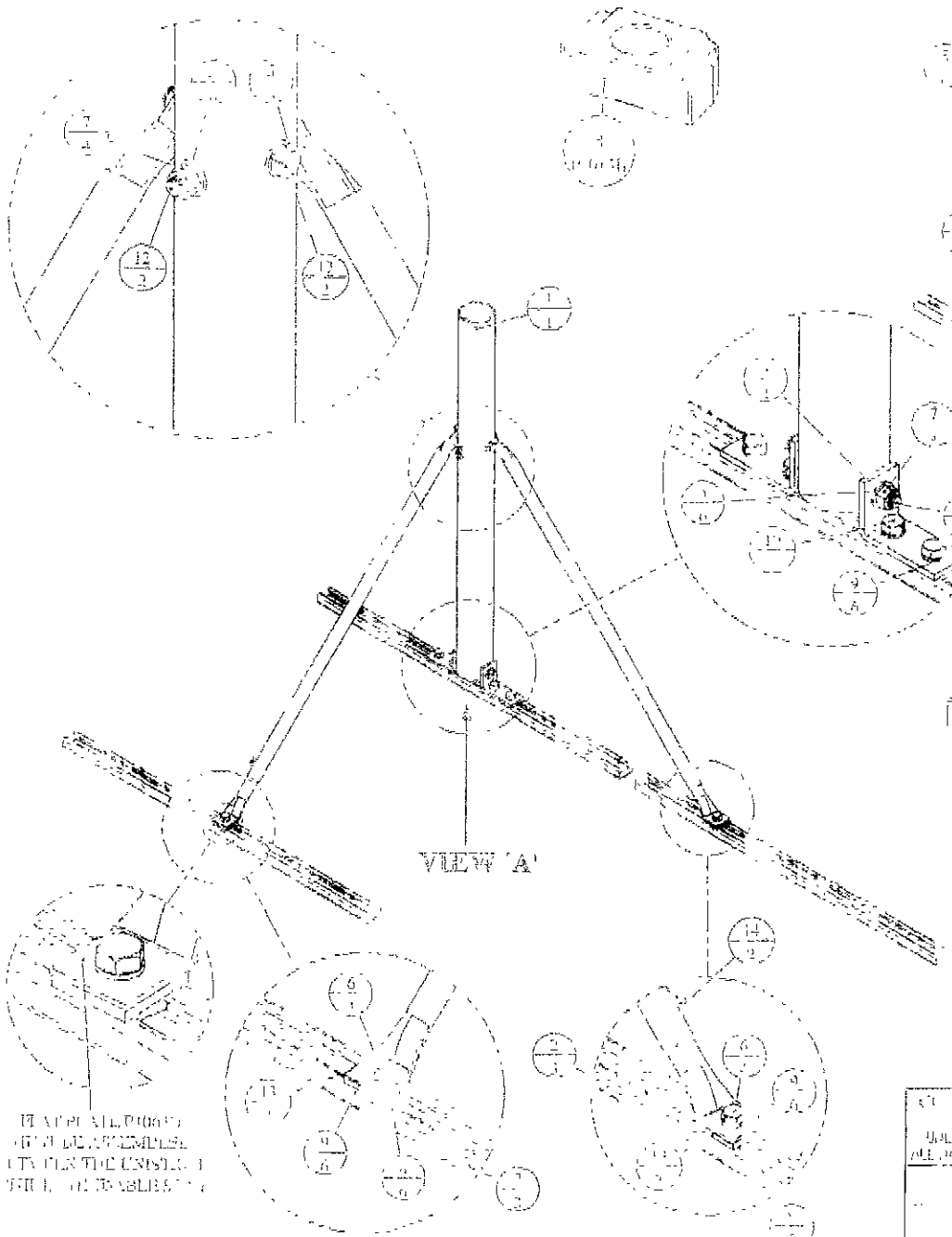

ITEM NO.	QTY.	PART NO.	DESCRIPTION
1	1	[illegible]	76.1 OD x 3.6 WALL GAL PIPE
2	3	[illegible]	41.0 x 22.0 GALVANISED UNISTRUT
3	2	[illegible]	NINETY DEGREE FITTING HG
4	2	M12 ESW	EXTERNAL TOOTH STAR WASHER
5	6	M12 FW	FLAT WASHER
6	2	M12 x 30 HB	M12 x 30 HEX HEAD BOLT
7	4	M12 HN	M12 HEX NUT
8	6	P30 3H	CHANNEL NUT M12 (HG)
9	6	M12 SW	SPRING WASHER
10	4	M12 x 25 HB	M12 x 25 HEX HEAD BOLT
11	2	P60/2070	HILLS INDUSTRIES EXTENDED DISPLAY
12	2	M12 x 100 HB	M12 x 100 HEX HEAD BOLT
13	2	P10 3H	FLAT PLATE FITTING HG
14	2	PIER SCREW	

DRAWING LEGEND

UNLESS OTHERWISE STATED ALL DIMENSIONS IN MILLIMETRES

DRAWN

CHECKED

APPROVED

DATE

SCALE

DIMENSIONAL TOLERANCE

DATE

SHEET SIZE

A3

CONTROL NO.

W4:

REVISION

DATE

CHG

DESCRIPTION

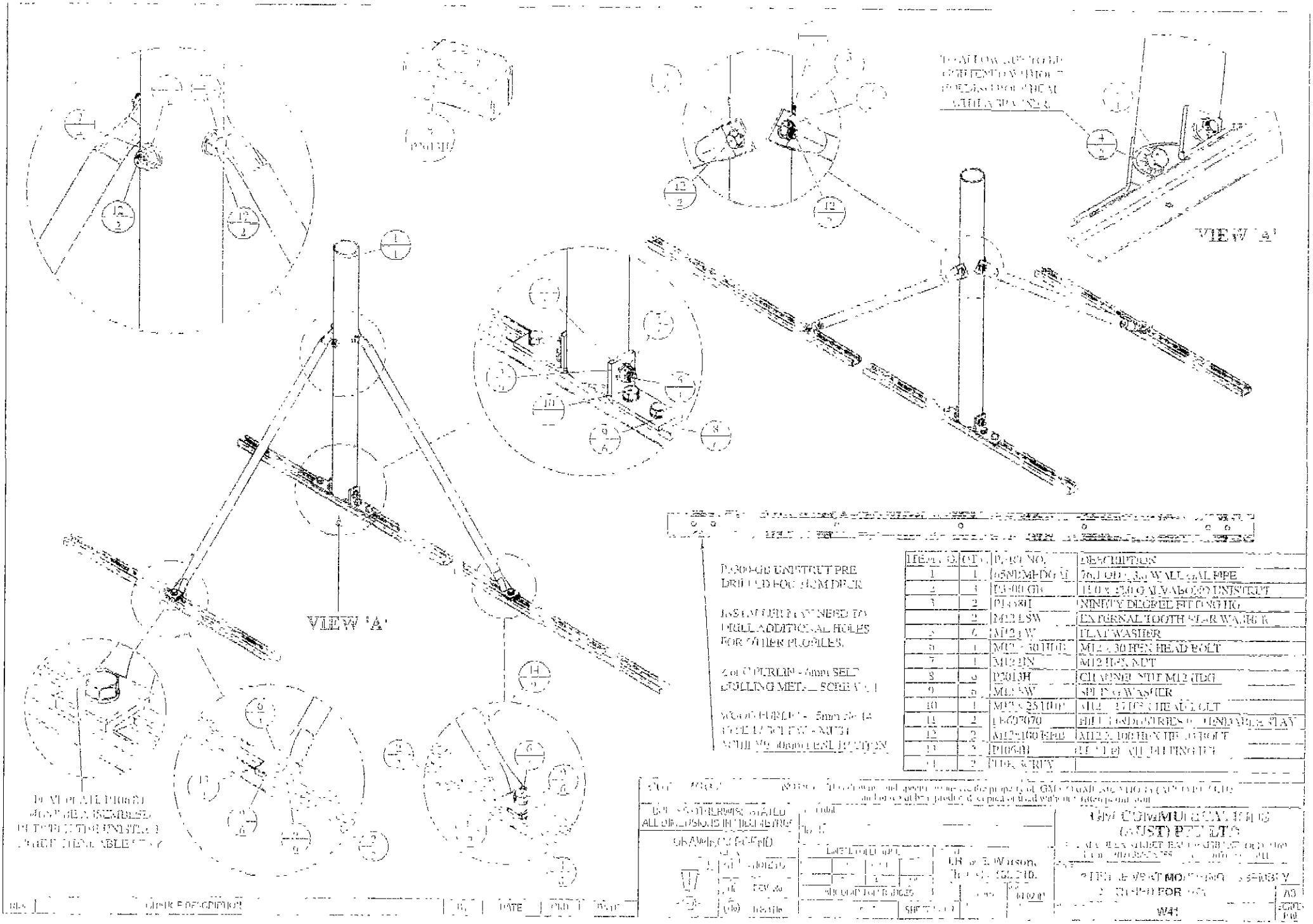
VIEW 'A'
VIEW 'A'
P3013H
M12 NUT
M12 x 30 HEX HEAD BOLT
M12 SW
M12 FW
M12 LSW
P1068H
P1068H
P3013H
M12 x 25 HEX HEAD BOLT
M12 x 100 HEX HEAD BOLT
M12 x 30 HEX HEAD BOLT
M12 FW
M12 LSW
M12 NUT
M12 FW
M12 SW

EUTELSAT

1.2m Receive-Transmit Offset Antenna System

Antenna Aperture		1.2 m (48 in.)
Operating Frequency	Rx	13.75 - 14.50 GHz
	Tx	10.70 - 12.75 GHz
Polarization		Linear, Orthogonal
Gain (±.2 dBi)	Rx	43.3 dBi @ 14.25 GHz
	Tx	41.5 dBi @ 11.95 GHz
3 dB Beamwidth	Rx	1.2° @ 14.3 GHz
	Tx	.8° @ 12.0 GHz
Sidelobe Envelope (Co-Pol dBi)		
1.8° < θ < 20°		29-25 log θ
20° < θ < 26.3°		-3.5
26.3° < θ < 48°		32-25 log θ
48° < θ < 180		-10 (typical)
Antenna Cross Polarization		≥30 dB in 1 dB Contour
Antenna Noise Temperature	10° El	45 K
	20° El	31 K
	30° El	24 K
Weight		1.2 kg (4 lbs)
VSWR	Rx	1.20:1 (18 min)
	Tx	1.20:1 (18 min)
Feed Interface	Rx	WR-75
	Tx	WR-75

Reflector Material		Glass Fiber Reinforced Polyester
Reflector Optics		One-Piece Offset Fed Prime Focus - Long Focal Length
Mount Type		Elevation over Azimuth
Elevation Adjust Range		7°-84° Continuous Fine Adjustment
Azimuth Adjust Range		360° Continuous, ±20° Fine Adjustment
Feed Horn Interface		2.89 in.-3.00 in. (73-76 mm) Diameter
Wind Loading	Operational	48 mi/h (72 km/h)
	Survival	125 mi/h (200 km/h)
Temperature		-50°C to 50°C
Humidity		0 to 100% (Condensing)
Atmospheric		Salt, Pollutants and Contaminants as Encountered in Coastal and Industrial Areas
Solar Radiation		300 BTU/h/ft²
Shock and Vibration		As Encountered During Shipping and Handling

Simulated Worlds California, USA
Phone: (818) 989-2300
Fax: (818) 989-4200
E-mail: info@simulated-worlds.com

Fiberstream Satellite
Phone: (+1) 713-1-567-0
Fax: (+1) 713-1-567-0
E-mail:
info@fiberstream-satellite.com
Web Site: www.fiberstream-satellite.com

© 1998 Fiberstream Satellite LLC

EUTELSAT

[illegible]

[illegible]

[illegible]	[illegible]	[illegible]
[illegible]	[illegible]	[illegible]
[illegible]	[illegible]	[illegible]
[illegible]	[illegible]	[illegible]

1.2m Receive-Transmit Offset Antenna System

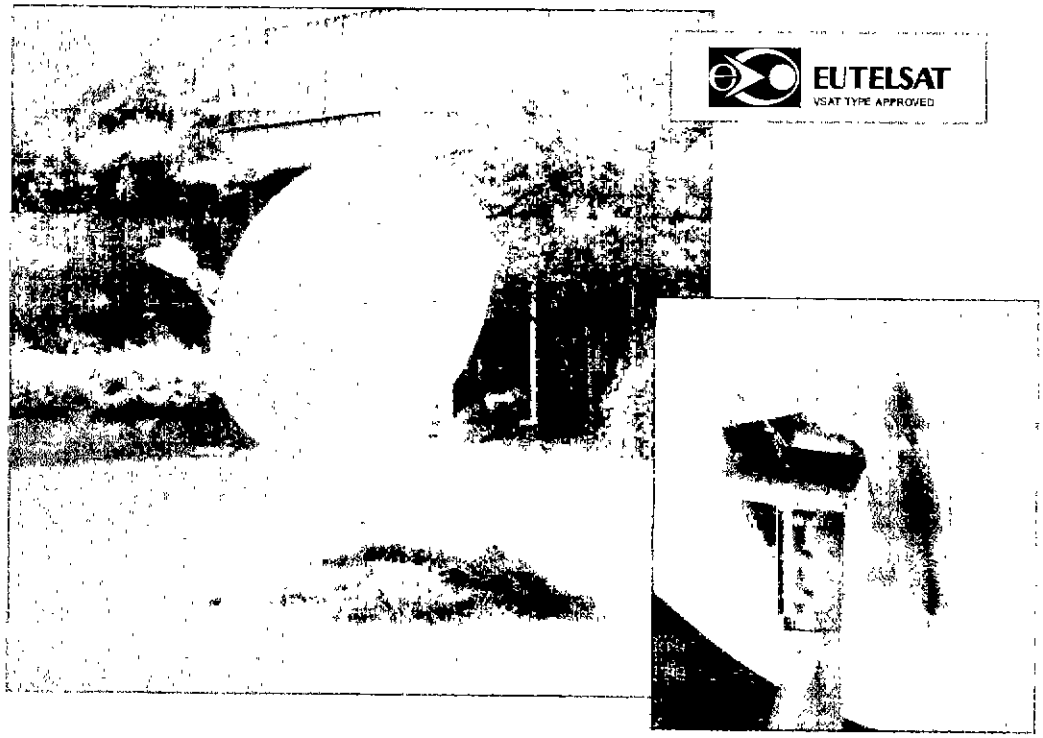

Sturdy Az/El mount with elevation scale

One-piece precision offset thermoset-molded reflector.

Fine azimuth and elevation adjustments.

Galvanized .75 in. O.D. feed support.

Factory pre-assembled mount.

Cadmium-plated hardware for maximum corrosion resistance.

Designed for lightweight outdoor units (ODUs). (5 lb. or 2.3 kg max. weight)

The Channel Master Type 123 1.2m Offset Rx-Tx Antenna is a rugged commercial grade product suitable for the most demanding applications. The reflector is thermoset-molded fiberglass with smooth surface accuracy. Molded into the rear of the reflector is a meshwork of beam reinforcement not only strengthens the antenna, but also helps to sustain the critical parabolic shape necessary for transmit performance. The reflector optics feature a long focal length for excellent cross-pol performance, required by many satellite operators.

The Az/El mount is constructed from heavy-gauge steel to provide a rigid support to the reflector. The Az/El mount secures the antenna to any 2.00 in.-3.00 in. O.D. mast and prevents flutter in high winds. A specially formulated powder coating process offers excellent protection from weather-related corrosion.

[illegible]