ZZCC N0186/06

INsight building certifiers pty ltd

Construction Certificate
Determination

issued under the Environmental
Planning and Assessment Act 1979
Section 109C (1) (b) 81A (2) and 81A (4)

Certificate No. 2008/2694

Council	Pittwater
Determination	Approved
date of issue	11 April 2008
Subject land	
Address	209 Riverview Road, Avalon
Lot No, DP No	Lot 2 DP 18667
Applicant	
Name	Mr Dennis Cowell
Address	Unit 16, 60-62 Old Pittwater Road, Brookvale NSW 2100
Contact No (phone)	9905 5686
Owner	
Name	Mr Graeme Dufty
Address	209 Riverview Road, Avalon NSW 2107
Contact No (phone)	9918 3531
Description of Development	
Type of Work	Alterations & Additions to an Existing Dwelling including New Lift & Garage
Builder or Owner/Builder	
Name	L B Dellit Pty Ltd
Contractor Licence No/Permit	26591C
Value of Work	
Building	$120,000 00

Attachments

- Copy of completed Construction Certificate Application Form
- Pittwater Council receipt no 236835 for payment of Long Service Levy

COUNCIL COPY

SCANNED
15 APR 2013
PITTWATER COUNCIL

Suite 13/90 Mona Vale Road Mona Vale NSW 2103 PO Box 326 Mona Vale NSW 1660 **ph 9999 0003** fax 9979 1555
email info@insightcert com au **ABN** 54 115 090 456

$30.00 Rept 236985 15/4/08 N0186/06

Plans & Specifications certified

The development is to be carried out in compliance with the following plans and documentation listed below and endorsed with *Insight Building Certifiers* stamp

- **Architectural Plans & Construction Specifications, reference nos CC-01A & CC-02A, prepared by Gartner Trovato Architects, dated 17 December 2007**
- **Structural Details, reference nos 7072-S0 00A, S1 00A, S1 01A, S1 02A, S2 00A, S2 01A, S2 02A, S3 00A, S3 01A, S3 02A, S4 00A & S4 01A, dated 21 February 2008 & S0 01A, dated January 2008, prepared and endorsed by Simon Waddington Structural Engineer and endorsed by Jeffery and Katauskas Pty Ltd, dated 12 March 2008**
- **Completed Form 2 of the Geotechnical Risk Management Policy for Pittwater dated 20 February 2008**
- **Council-issued Street Levels reference no 235132 dated 4 March 2008 (Note Existing to Council standards)**
- **Schedule of Finishes, prepared by Dennis Cowell, dated 27 March 2008**

Certificate

I hereby certify that the above Plans documents or Certificates satisfy

- The relevant provisions of the Building Code of Australia
- The relevant conditions of this Development Consent

and that work completed in accordance with the documentation accompanying the application for this Certificate (and any modifications as verified by me and shown on that documentation) will comply with the requirements of the Environmental Planning & Assessment Regulation referred to in Section 81A(5) of the Environmental Planning & Assessment Act 1979

Signed

Date of endorsement 11 APR 2008
Certificate No **2008/2694**

Certifying Authority

Name of Accredited Certifier	Tom Bowden
Accreditation No	BPB0042
Accreditation Authority	Building Professionals Board
Contact No	(02) 9999 0003
Address	13/90 Mona Vale Road, Mona Vale NSW 2103

Development Consent

Development Application No	**Land & Environment Court No 1015 of 2007**
Date of Determination	**26 September 2007**

BCA Classification **1a**

insight building certifiers pty ltd

RECEIVED
18 MAR 2008

APPLICATION FOR A CONSTRUCTION CERTIFICATE

1. Applicant's details

It is important that we are able to contact you if we need more information. Please give us as much details as possible

Mr ✓ Mrs ☐ Ms ☐ Dr ☐ Other

Given Names (or ACN): DENNIS FRANK

Family Name (or Company): COWELL

Postal Address (we will post all mail to this address): UNIT 16, 60-62 OLD PITTWATER RD BROOKVALE

Post Code: 2100

Daytime telephone: 9905 5886

Alternate no: 0414 494386

Mobile no: 0414 494386

2. Owner's consent

Every owner of the land must sign this form. If the owner is a company the form must be signed by an authorized director and the common seal must be stamped on this form. If the property is a unit under the strata title or a lot in a community title, then in addition to the owner's signature, the common seal of the body corporate must be stamped on this form over the signature of the owner and signed by the Chairman or Secretary of the Body Corporate or the appointed managing agent.

Owner(s): GRAEME AND TRACEY DUFTY

Address: 209 RIVERVIEW ROAD

AVALON

As owner(s) of the land to which this application relates, I/We consent to this application. I/We also consent for the Principal Certifying Authority and/or Accredited Certifier to enter the land to carry out inspections relating to this application.

Signature(s):

Without the owner's consent we will not accept the application. This is a very strict requirement for all applications. If you are signing on the owner's behalf as the owner's legal representative, you must state the nature of your legal authority and attach documentary evidence (eg. power of attorney, executor, trustee, company director, etc).

3. Location of property

Unit/Street no: 209

Street name: RIVERVIEW ROAD

Suburb: AVALON

Post code: 2107

Legal Property Description (these details are shown on your rate notices, property deeds, etc)

Lot no: 2

DP no: 18667

COUNCIL COPY

4. Description of work

What type of work do you propose to carry out?

Please describe briefly everything that you want approved

CONSTRUCTION OF A NEW LIFT, DOUBLE GARAGE DRIVEWAY AND NEW ENTRY TO RESIDENCE,

5. Estimated cost of work

The estimated cost of the development or contract price may be subject to review

Estimated cost of work: $120,000.00

6. Development Consent

Council Consent no: LEC No 10105/2007 Date of Determination: 26/09/07

7. Building Code of Australia classification

This can be found on the development consent BCA Classification: CLASS 1.

8. Builder's details

If known, to be completed in the case of residential building work

Name: L B DELLIT PTY LTD. License no: 2659/C

Owner/builder permit no: N/A.

9. Applicant's declaration

I apply for a Construction Certificate to carry out building works as described in this application. I declare that all the information in this application and checklist is, to the best of my knowledge, true and correct

Signature: Date: 13/03/08

SUBMISSION REQUIREMENTS

A GENERAL

Are the plans submitted with the Construction Certificate Application in accordance with the Development Consent?

Yes ☑ No ☐

Have all the conditions of Development Consent relating to the issue of the Construction Certificate been fully complied with?

Yes ☑ No ☐

If you have answered NO to either of the above questions, then you will need to speak with the Accredited Certifier BEFORE LODGING YOUR APPLICATION

B ALL PROPOSALS (has the following required information been submitted?)

Yes	No	Not Applicable	In the case of an application for a Construction Certificate for building work
☑	☐	☐	Three (3) copies of detailed architectural plans and specifications
☑	☐	☐	The plan for the building must consist of a general plan drawn to a scale not less than 1 100 and a site plan drawn to a scale not less than 1 200 The general plan of the building is to a) show a plan of each floor section b) show a plan of each elevation of the building c) show the levels of the lowest floor and of any yard or unbuilt on area belonging to that floor and the levels of the adjacent ground d) indicate the height design and full construction details e) indicate the provision for fire safety and fire resistance (if any)
☑	☐	☐	Where the proposed building work involves any alteration or addition to or rebuilding of an existing building all copies of the general plan are to be coloured or otherwise marked to the satisfaction of the Council to adequately distinguish the proposed alteration addition or rebuilding with a separate letter listing the proposed changes being submitted
☑	☐	☐	3 copies of a specification a) to describe the construction and materials of which the building is to be built and the method of drainage sewerage and water supply b) state whether the materials proposed to be used are new or second hand and give particular
☐	☐	☑	Where the proposed building work involves a modification to previously approved plans and specifications the general plans must be coloured or otherwise marked to the satisfaction of the Accredited Certifier to adequately distinguish the modification
☐	☐	☑	If the proposed building work involves a modification to previously approved plans and specification which were subject of a Development Consent has the original Development Consent been modified by Council?
☐	☐	☑	Except in the case of an application for or in respect of domestic building work a) a list of any fire safety measures that are proposed to be implemented in the building or on the land on which the building is situated and b) if the application relates to a proposal to carry out any alteration or rebuilding of or addition to an existing building a separate list of such of those measures as are currently implemented in the building or on the land on which the building is situated This list must specify the standard of design of each of those fire safety measures to which they were originally installed c) This list must describe the extent capability and basis of design of each of the measures concerned
☐	☐	☑	Copy of BASIX Certificate & Report
☐	☐	☑	All other documentation to satisfy conditions of Development Consent

HOME BUILDING ACT 1989 (as amended) OWNER/BUILDER REQUIREMENTS

Applicants for work at a residential property with a value of work over $12 000 require insurance as specified in the Home Building Act 1989

Owner Builders require Property Owner Builder's Permit issued by the Department of Fair Trading for all projects over $5 000 In addition to this permit all projects valued in excess of $12 000 may also require a contract of insurance under the provisions of the Home Building At 1989 as amended This requirement will take effect should the property owner offer the property for sale in the ensuing period of 7 years

Enquiries on any matters relevant to this section should be taken up with the Department of Fair Trading at Level 21 Astra House 227 Elizabeth Street Sydney (ph 133220)

LONG SERVICE LEVY (applies to all classes of buildings)

A Long Service Levy at 0 35% of the cost of works is payable on projects valued $25 000 or more This sum can be paid directly to the Long Service Payments Corporation or to Council acting as an agent to the Corporation Partial exemption from the levy may be granted to non profit organizations churches and to owner/builders The levy may also be paid in instalments Application forms for these exemptions are available from Council but all enquiries in this regard should be address to the Long Service Payments Corporation

THE CONSTRUCTION CERTIFICATION CANNOT BE ISSUED UNLESS THE LONG SERVICE LEVY AND HOME BUILDING ACT 1989 INSURANCE (APPLICABLE TO RESIDENTIAL PROPERTIES) HAVE BEEN PAID OR EVIDENCE OF THE EXEMPTION PROVIDED TO COUNCIL

PARTICULARS OF THE PROPOSAL

What is the area of the land (m^2)?	Gross floor area of building (m^2) as proposed 164 m^2
What are the current uses of all or parts of the building(s)/land? RESIDENTIAL	Location AVALON Use RESIDENTIAL
Does the site contain a dual occupancy? No	What is the gross floor area of the proposed addition or new building (sq metres)? 62 m^2
What are the proposed uses of all parts of the building(s) land? RESIDENTIAL	Number of pre-existing dwellings ONE
Number of dwellings to be demolished NIL	How many dwellings proposed? ONE
How many storeys will the building consist of? 5 LEVELS.	Will the new building be attached to the existing building? YES Will the new building be attached to any new building? NO

MATERIALS TO BE USED

The following information must be supplied for the Australian Bureau of Statistics

Place a tick (√) in the box which best describes the materials the new work will be constructed of

WALLS		FLOOR		ROOF		FRAME	
Brick veneer	☑	Concrete	☑	Aluminium	☐	Timber	☑
Full brick	☐	Timber	☐	Concrete		Steel	☑
Single brick	☐	Other	☐	Concrete tile	☐	Other	☐
Concrete block	☐	Unknown	☐	Fibrous cement	☐	Unknown	☐
Concrete/masonry	☐			Fibreglass	☐		
Concrete	☐			Masonry/terracotta shingle	☐		
Steel	☐			Tiles	☐		
Fibrous cement	☐			Slate	☐		
Hardiplank	☐			Steel	☑		
Timber/weatherboard	☑			Terracotta tile	☐		
Cladding aluminium	☐			Other	☐		
Curtain glass	☐			Unknown	☐		
Other	☐						
Unknown	☐						

Pittwater Council
ABN 61340837871

TAX INVOICE
OFFICIAL RECEIPT

10/04/2008 Receipt No 236835

To DENNIS COWELL

16/60-62 OLD PITTWATER RD
BROOKVALE

Qty/ Applic	Reference	Amount
	QLSL Builders	$1 225 00
GL Receip	N0186/06 209 RIVERVIEW RD AVALON	
1	CCGST CCard +G	$11 14
GL Receip	1	
	GST	$1 11
GL Receip		
To GL Receipt:		

Total Amount	$1 237 25
Includes GST of	$1 11

Amounts Tendered

Db/Cr Card	$1 237 25
Total	$1 237 25
Rounding	$0 00
Change	$0 00
Nett	$1 237 25

Printed 10/04/2008 2 01 11 PM
Cashier GHill

COMMONWEALTH BANK
EFTPOS
PITTWATER COUNCIL
MONA VALE NSW 1
TERMINAL 22195700

CUSTOMER COPY

CARD NO	535316-986
EXPIRY DATE	09/09
CREDIT	006063
PURCHASE	1237 25
TOTAL	AUD1237 25

10 APR 2008 14 01
CBA MASTERCARD

APPROVED 08

Pittwater Council
Information for Access Driveway Profiles
1 July 2006 – 30 June 2007

To	Dennis Cowell	**Date**	4 March, 2008
Postal Address	16/60-62 Old Pittwater Road Brookvale 2100		
		Receipt No	**235132**
		Amount	71 00

ACCESS DRIVEWAY PROFILE AT **209 Riverview Road, Avalon**

- The proposed vehicular access driveway profile shall be as per the enclosed plan **NL**
- **Type of Construction** Domestic
  - **For Residential single & dual occupancy** - 20MPa Concrete, 150mm thick
  - **For Other** - 20MPa Concrete, 180mm thick with F72 mesh
- **Slab Construction** Vehicular access slab 3 6m long, 5 0m wide at gutter crossing to 6 5m wide at the boundary
- **Existing to Council standards**
- Council will only permit an absolute maximum gradient of 25% (1 in 4) measured at any point on the driveway and that an ease may be required for access into the car stand area, carport or garage Refer to relevant attached profile
- All work within the road reserve (including excavation) in connection with the above, is to be carried out by authorised Contractors only,
- Quotations for the work specified above should be obtained from any of the contractors on Council's list and should be for the whole of the work stated,
- Construction of vehicular access will be strictly in accordance with the profile supplied, and
- A formwork inspection by Council is required prior to construction (Provide minimum 24 hours notice)

1	**NOTE THAT THIS INFORMATION SHEET DOES NOT CONSTITUTE AN APPROVAL TO COMMENCE OR PROCEED WITH ANY WORK ON SITE**
2	**A SECTION 139 CONSENT UNDER THE ROADS ACT – 1993 IS REQUIRED (FORM UI203)**
3	**FAILURE TO OBTAIN SUCH CONSENT PRIOR TO COMMENCING WORK WILL INCUR A PENALTY**

COUNCIL COPY

S. Melderis

Sigi Melderis
ASSETS / RESTORATIONS OFFICER
Telephone 9970 1348

NORMAL (N)

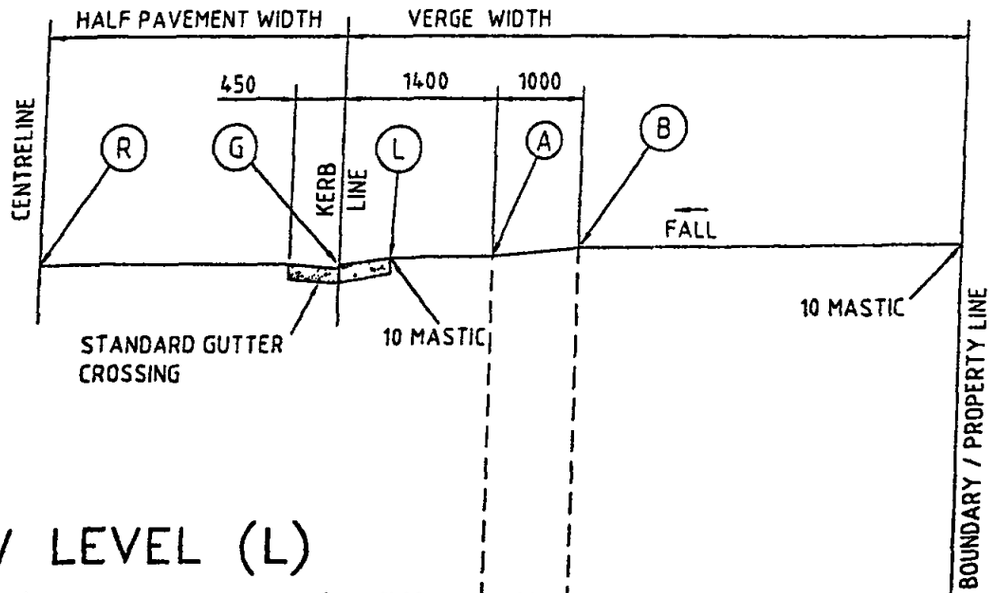

LOW LEVEL (L)

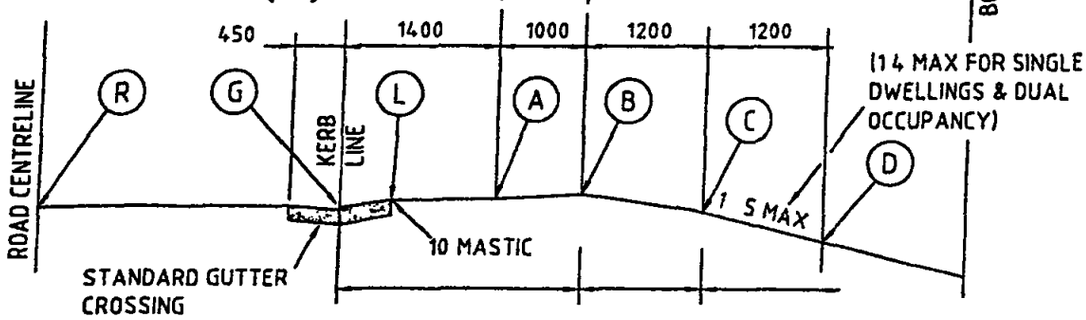

(1 6) (1 6—1 2) (1 2)
(MAX BATTER FROM EDGE OF DRIVEWAY TO FINAL C L)
(WHERE THERE IS NO CONSTRUCTED FOOTPATH)

POINT	REMARKS	LEVELS
R	ROAD CENTRELINE	
G	INVERT OF GUTTER	
L	BACK OF LAYBACK	100 ABOVE "G
A	1400 FROM KERB LINE	130 ABOVE G
B	2400 FROM KERB LINE	150 ABOVE "G
C	3600 FROM KERB LINE	MAX 20 ABOVE "G"
D	4800 FROM KERB LINE	MAX 130 BELOW G

NOTE

- To be read in conjunction with Pittwater 21 Development Controls

PITTWATER COUNCIL

Standard Driveway Profile

NORMAL TO LOW

PLAN No PWC-DW6

REV No B

DATE 26/8/05

GEOTECHNICAL RISK MANAGEMENT POLICY FOR PITTWATER
FORM NO 2 – To be submitted with detailed design for construction certificate

Development Application for _____
Name of Applicant

Address of site 209 RIVERVIEW RD, AVALON

Declaration made by Structural or Civil Engineer in relation to the incorporation of the Geotechnical issues into the project design

I SIMON WADDINGTON on behalf of SIMON WADDINGTON
(insert name) (trading or company name)

on this the 20.2 2008
(date)

certify that I am a Structural or Civil Engineer as defined by the Geotechnical Risk Management Policy for Pittwater I am authorised by the above organization/company to issue this document and to certify that the organization/company has a current professional indemnity policy of at least $2million I also certify that I have prepared the below listed structural documents in accordance with the recommendations given in the Geotechnical Report for the above development

Geotechnical Report Details

Report Title SUPPLEMENTARY GEOTECHNICAL ASSESSMENT PROPOSED ALTERATIONS AND
Report Date 30.08 2005 ADDITIONS TO HOUSE 209 RIVERVIEW RD, CLAREVILLE
Author JEFFERY & KATAUSKAS PTY LTD, REFERENCE 17993VT3Let1

Structural Documents list:

7072-SD.00, 0.01, 1.00, 1.01, 1.02, 2.00, 2.01, 2.02, 3.00, 3.01, 3.02, 4.00, 4.01

I am also aware that Pittwater Council relies on the processes covered by the Geotechnical Risk Management Policy including this certification as the basis for ensuring that the geotechnical risk management aspects of the proposed development have been adequately addressed to achieve an "Acceptable Risk Management" level for the life of the structure taken as at least 100 years unless otherwise stated and justified (ASSUMING APPROPRIATE MAINTENANCE OF THE BUILDING DURING ITS LIFE)

SIMON WADDINGTON (signature)
(name)

Declaration made by Geotechnical Engineer or Engineering Geologist in relation to Structural Drawings (refer to Jeffery and Katauskas Pty Ltd letter, Ref. 17993VT3Let 2 dated 12 March 2008

We prepared and/or technically verified the abovementioned Geotechnical Report as per Form 1 dated 30/8/2005 and now certify that we have viewed the above listed structural documents prepared for the same development we are satisfied that the recommendations given in the Geotechnical Report have been appropriate taken into account by the structural engineer in the preparation of these structural documents
We are aware that Pittwater Council relies on the processes covered by the Geotechnical Risk Management Policy including this certification as the basis for ~~ensuring~~ that the geotechnical risk management aspects of the proposed development have been adequately addressed to achieve an "Acceptable Risk Management" level for the life of the structure taken as at least 100 years unless otherwise stated and justified in the Report and that reasonable and practical measures have been identified to remove foreseeable risk as indicated in the Geotechnical Report

Signature
Name ANTHONY WALICKA
Chartered Professional Status MIE AUST CPENG NPER
Membership No 386930
Company for and on behalf of JEFFERY and KATAUSKAS PTY LTD

Note "remove risk" means "reduce risk", refer to definitions in Section 1.4 of Council P21 DCP Appendix 5

COUNCIL COPY

Jeffery and Katauskas Pty Ltd

CONSULTING GEOTECHNICAL AND ENVIRONMENTAL ENGINEERS
ABN 17 003 550 801

115 WICKS ROAD MACQUARIE PARK NSW 2113
POSTAL ADDRESS PO BOX 976 NORTH RYDE BC NSW 1670
Tel 02 9888 5000 • Fax 02 9888 5001
Email engineers@jkgroup net au

12 March 2008
Ref 17993VT3Let2

Mr Dennis Cowell
Unit 16
60-62 Old Pittwater Road
BROOKVALE NSW 2100

Dear Sir

GEOTECHNICAL REVIEW OF STRUCTURAL DRAWINGS
PROPOSED ADDITIONS TO HOUSE
209 RIVERVIEW ROAD, CLAREVILLE, NSW

As requested, we have reviewed the structural drawings as detailed in the following in relation to our geotechnical assessment report (Ref 17993VT3Let1) dated 30 August 2005 The following drawings were supplied

- Structural drawings by Simon Waddington, Drawing Nos 7072-S0 00, S0 01, S1 00, S1 01, S1 02, S2 00, S2 01, S2 02, S3 00, S3 01, S3 02, S4 00 and S4 01 (all Rev A) dated January 2008

The structural drawings have been prepared for the proposed refurbishment, mainly on the eastern side of the existing house, including the construction of a new garage The driveway is to be raised to match the new garage floor level A lift is to be constructed at the north-west corner of the garage, with an access corridor at the lowest floor level (Level 1) Due to the steepness of the site, some additional structural details and notes on construction methodology may be required in site sketches following structural and geotechnical inspections during construction All temporary excavations to accommodate the proposed lift and corridor and construction of the retaining walls should comply with the requirements outlined in

our August 2005 geotechnical report or as otherwise agreed during the geotechnical inspections

The listed structural drawings were reviewed regarding geotechnical aspects of the proposed development and no calculation checks or structural assessments were made This review does not relieve the structural engineers of their responsibility for the design shown on the drawings

The structural drawings for the proposed refurbishment, lift, garage and raised driveway are considered to have been prepared taking into account the intent of the recommendations provided within the geotechnical report (Ref 17993VT3Let1)

A completed copy of Form 2, cross referenced to this letter, is attached

Geotechnical Inspections During Construction

Several geotechnical inspections will be required during construction The geotechnical inspections will need to be completed in order for the geotechnical engineer to complete Council Form 3 or a compliance letter at the end of construction If all geotechnical inspections are not completed during construction, then only the issue of a qualified Form 3/compliance letter would be able to be provided We recommend that the builder be made aware of the geotechnical inspections that are required during construction The required inspections are summarised as follows

- The geotechnical engineer must inspect footing excavations prior to the placement of reinforcement and concrete
- The geotechnical engineer must inspect the lift shaft and passage excavations to confirm the batter slopes, batter treatment (rock dowels, rock-bolts, mesh, shotcrete, buttresses, etc) and retention requirements, and the extent and

volume of groundwater seepage Note the soil and sandstone above the Level 2 floor slab will probably require support

- Proposed material to be used for backfilling behind retaining walls must be approved by the geotechnical engineer prior to placement
- The structural and/or geotechnical engineer must inspect all subsurface drains prior to backfilling

Should you require any further information regarding the above please do not hesitate to contact the undersigned

Yours faithfully
For and on behalf of
JEFFERY AND KATAUSKAS PTY LTD

Tony Walker
Associate

Encl Form 2
Endorsed structural drawings

Insight Building Certifiers Pty Ltd
Attention Sarita Ellison

Re 209 Riverview Road, AVALON

Schedule of Finishes to satisfy Condition C7

External Brickwork Apricot coloured face bricks to match existing walls

External Timber Facings: Stained Western Red Cedar to match existing walls

Roof Sheeting "Pale Eucalypt" Colorbond corrugated iron roof sheeting to match existing

Stone Facings. Golden sandstone pillars as feature panels on the front elevation

Paint Finishes To match existing colours

Concrete Driveway. Textured concrete to match existing pavements

Should there be further information required then please contact the undersigned on mobile 0414 494386

Yours faithfully,

Dennis Cowell.

COUNCIL COPY

NOTE: MECHANICAL VENTILATION TO BE PROVIDED TO WC IN ACCORDANCE WITH PART 3.8.5 OF THE BUILDING CODE OF AUSTRALIA

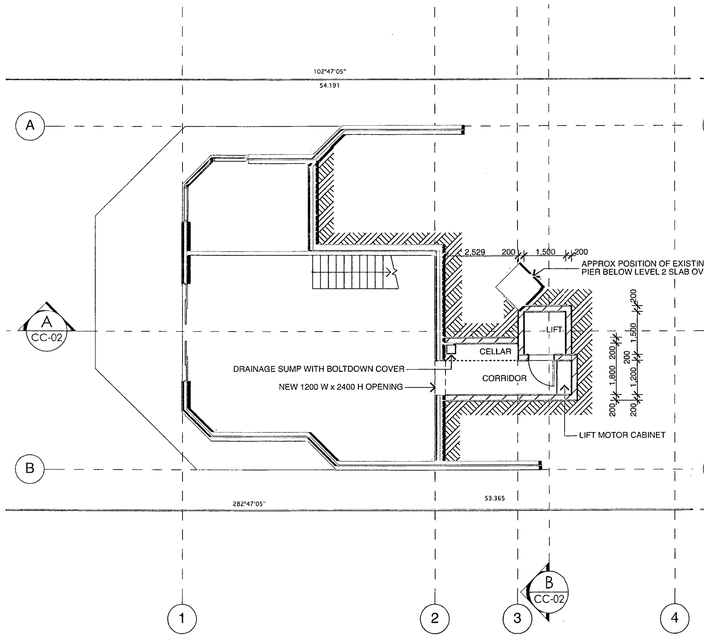

1 Level 1 19.41
Scale : 1 : 100

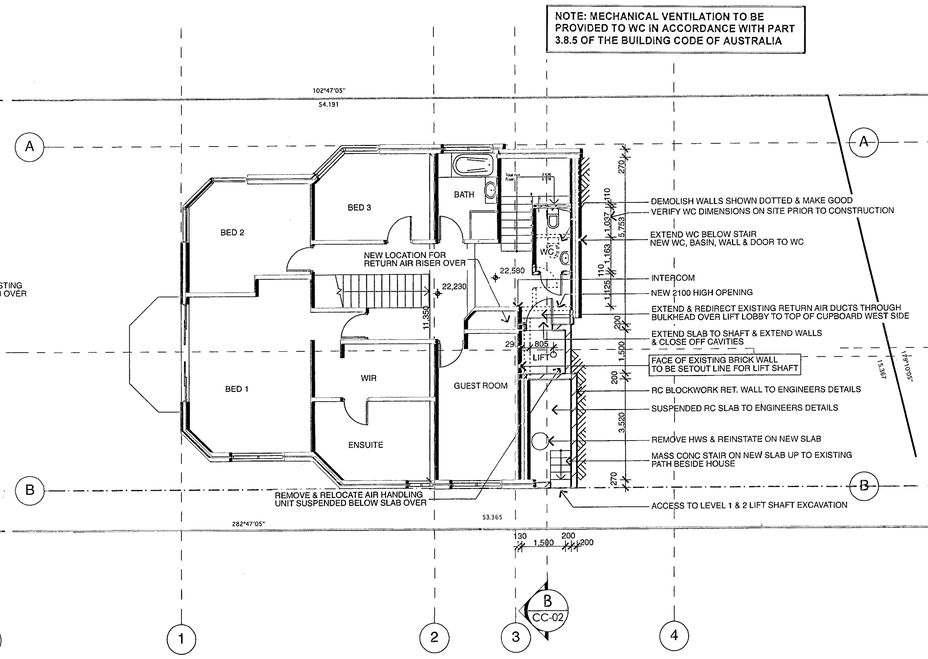

2 Level 2 22.41
Scale : 1 : 100

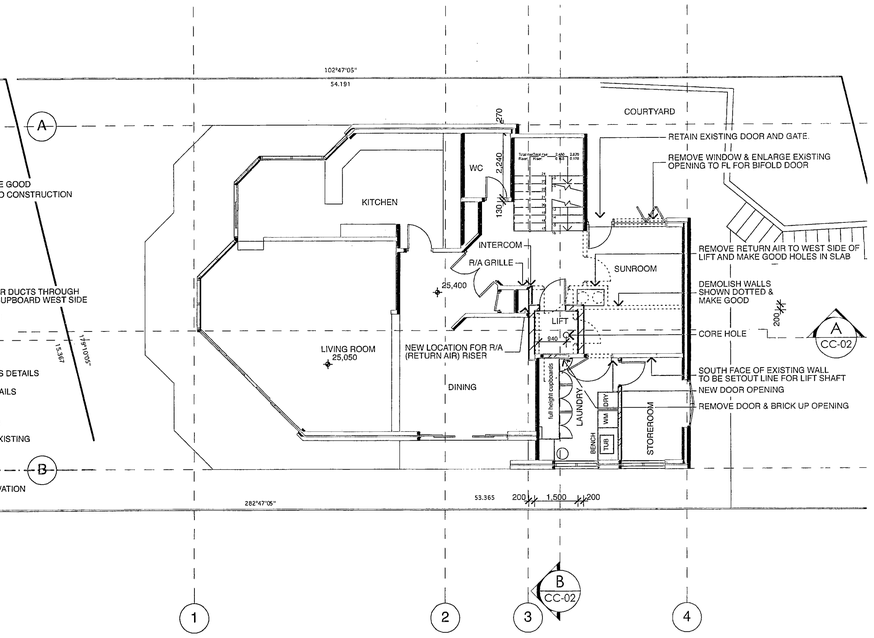

3 Level 3 25.40
Scale : 1 : 100

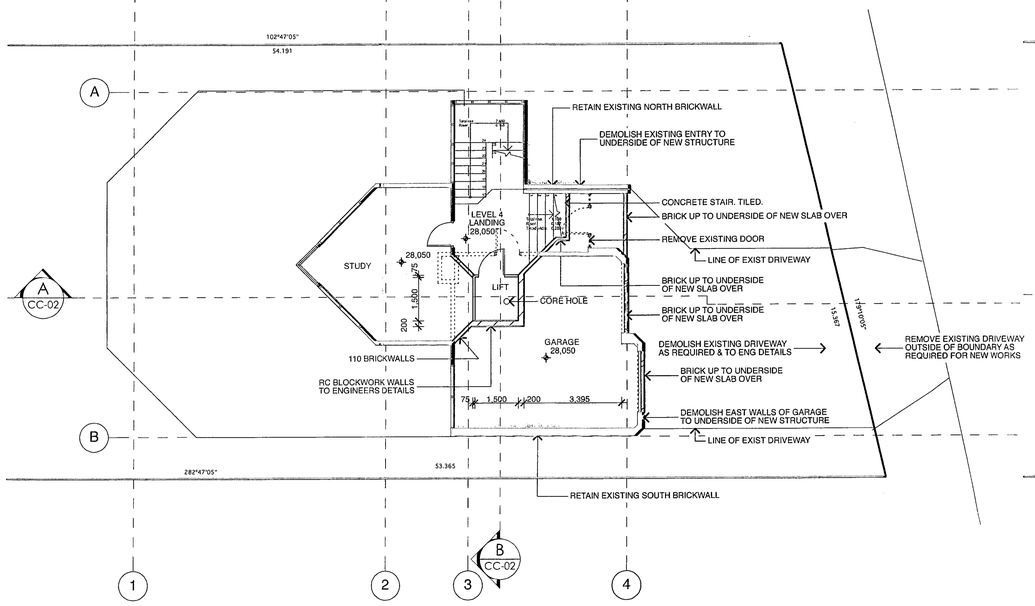

4 Lev 4 Existing garage 28.05
Scale : 1 : 100

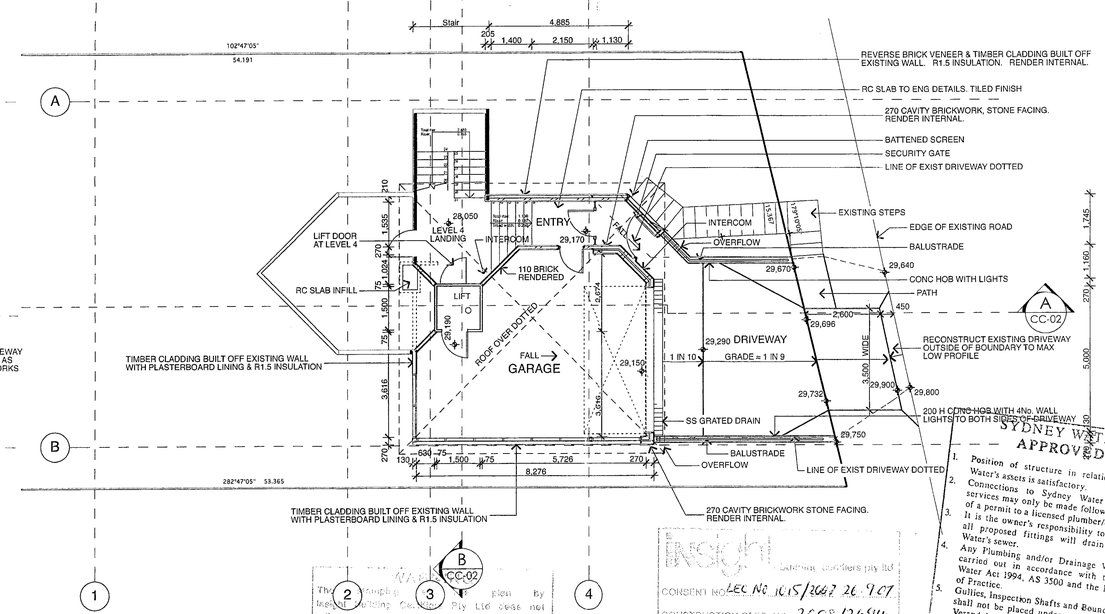

5 Lev 5 New Garage 29.15
Scale : 1 : 100

SYDNEY WATER
APPROVED
1. Position of structure in relation to Sydney Water's assets is satisfactory.
2. Connections to Sydney Water sewer/water services may only be made following the issue of a permit to a licensed plumber/drainer. It is the owner's responsibility to ensure that all proposed fittings will drain to Sydney Water's sewer.
3. Any Plumbing and/or Drainage Work to be carried out in accordance with the Sydney Water Act 1994, AS 3500 and the NSW Code of Practice.
4. Gullies, Inspection Shafts and Boundary Traps shall not be placed under any Roof, Balcony, Verandah, Floor or other cover unless otherwise approved by Sydney Water.
5. Property No. 3450525
6. Reece, Mona Vale
Quick Check Agent on behalf of SYDNEY WATER
Per reece 3 3 08

BRIGHT Building Certifiers Pty Ltd
CONSENT NO. LEC No 1015/2007 26.9.07
CONSTRUCTION CERT NO. 2008/2694
CONSTRUCTION CERTIFICATE PLANS
Bowden Accreditation No. BPB0042

The Structural Engineer of Shale responsibility to ensure the structural adequacy of this project.
The Applicant's Structural Engineer or other Professional at their responsibility to ensure these drawings details are consistent with the design. Construction

THESE DRAWINGS MUST BE READ IN CONJUNCTION WITH THE DEVELOPMENT CONSENT REQUIREMENTS RELEVANT TO THE PROJECT

Date :	Issue :	Description :	Date :	Issue :	Description :	Date :	Issue :	Description :	Date :	Issue :	Description :
17 Dec 2007	A	ISSUED FOR CC PURPOSES									

The builder shall check and verify all dimensions and verify all errors and omissions to the Architect. Do not scale the drawings. Drawings shall not be used for construction purposes until issued by the Architect for construction.

GARTNER TROVATO ARCHITECTS
12/13 BLACKN STREET
P.O BOX 1122
MONA VALE, NSW 2103
+612 9979 4411
+612 9979 4402
GT@BIGPOND.NET

Project : New Lift and Garage 209 Riverview Road, AVALON	Drawn/Designed : LT & AH	Date : NOV 2007	
Client : G & T Dufty	Project Number : 0728	Scale : 1 : 100 @ (A1)	
Drawing : Floor Plans	Drawing No. : CC-01	Issue : A	

Plot Scale: 17/12/07

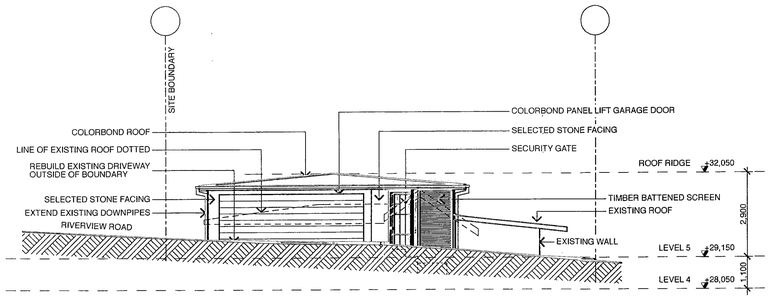

1 East Elevation
Scale : 1 : 100

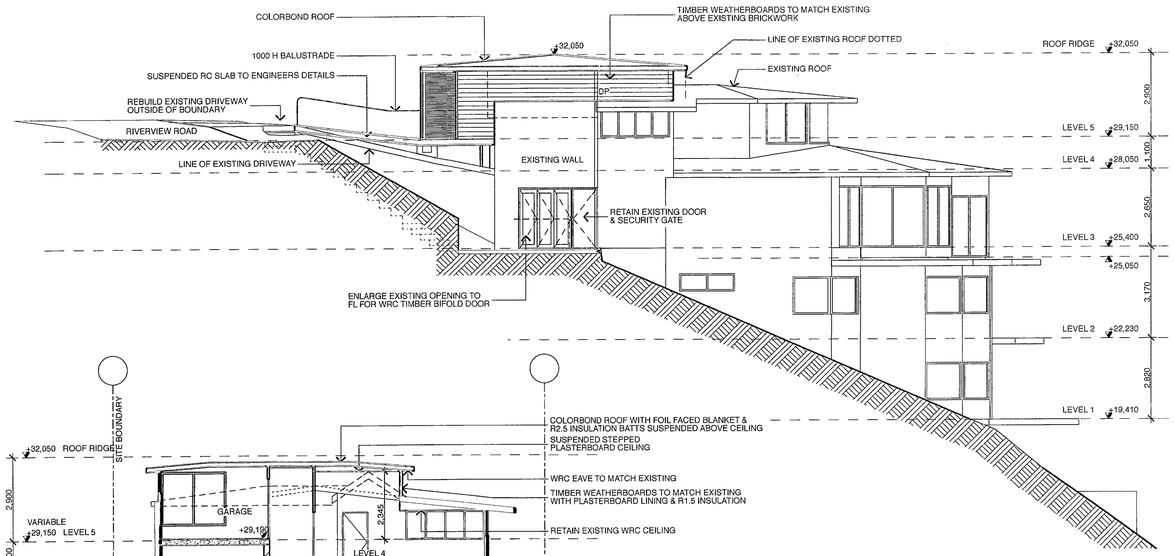

4 North Elevation
Scale : 1 : 100

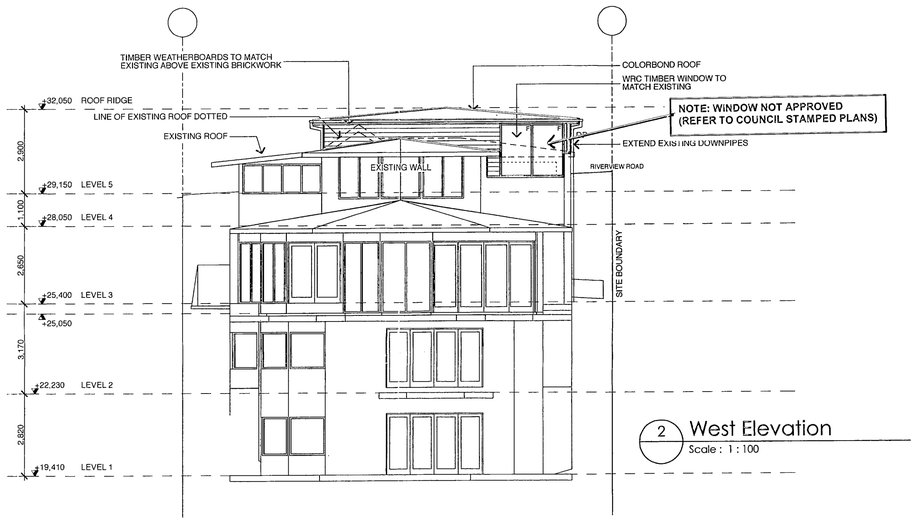

2 West Elevation
Scale : 1 : 100

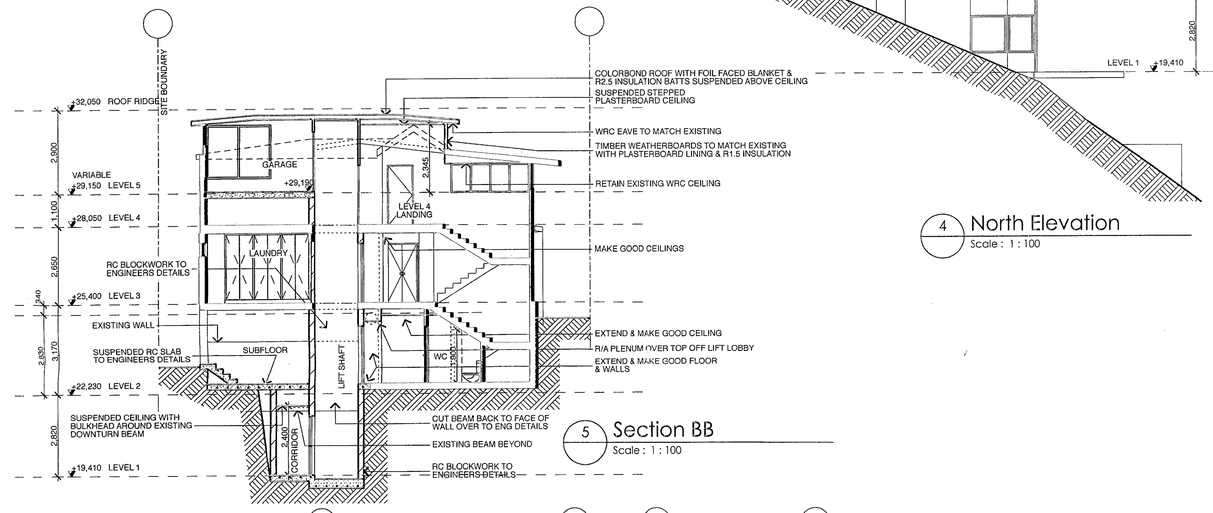

5 Section BB
Scale : 1 : 100

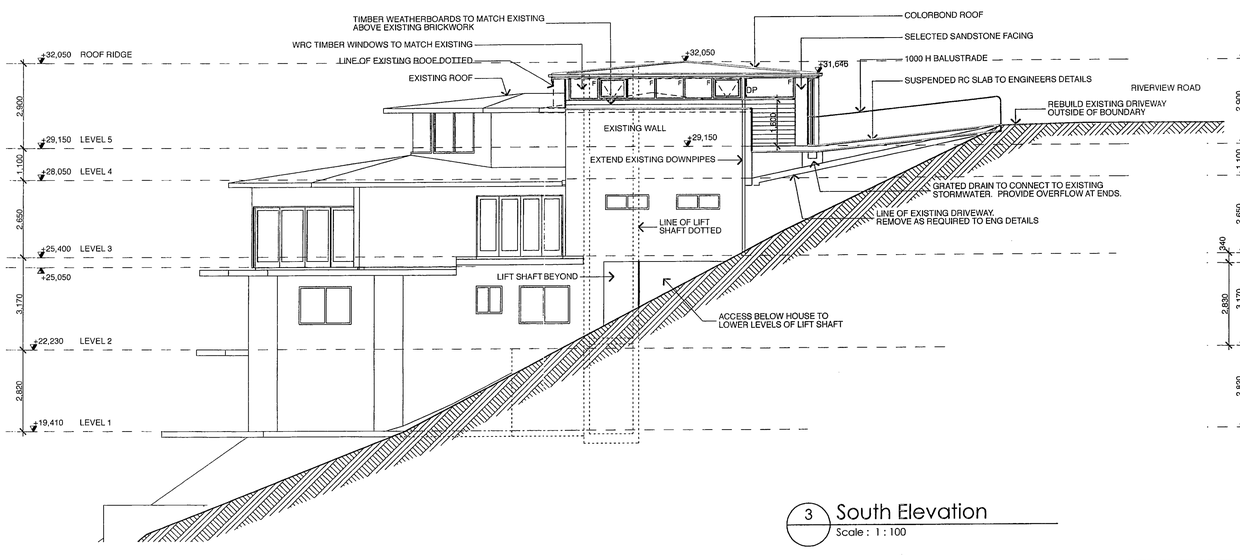

3 South Elevation
Scale : 1 : 100

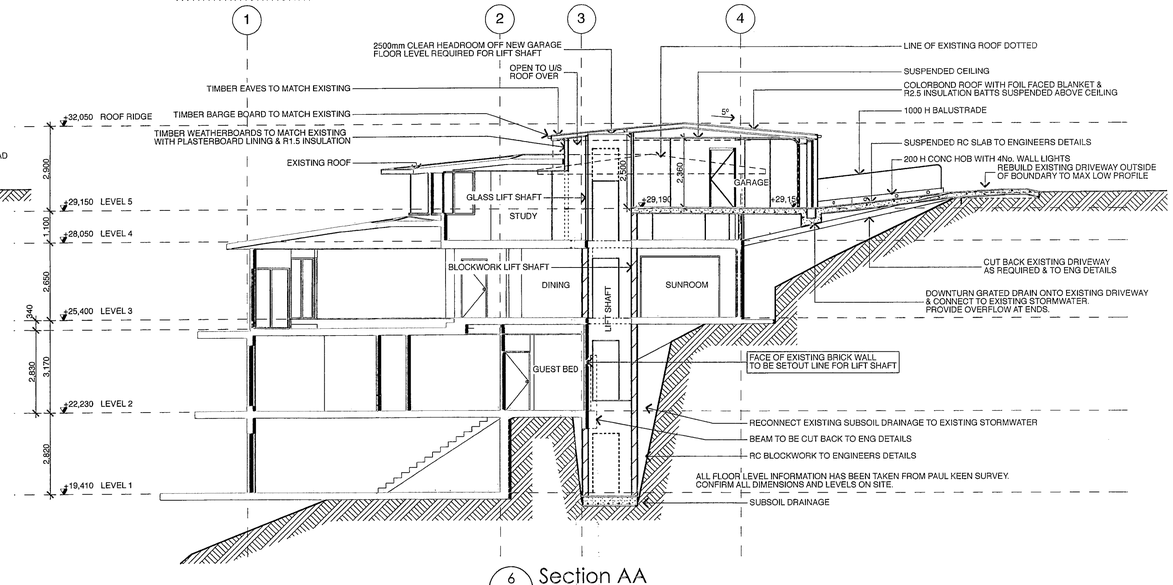

6 Section AA
Scale : 1 : 100

THESE DRAWINGS MUST BE READ IN CONJUNCTION WITH THE DEVELOPMENT CONSENT REQUIREMENTS RELEVANT TO THE PROJECT

Plot Date: 17/12/07

Date :	Issue :	Description :	Date :	Issue :	Description :	Date :	Issue :	Description :	Date :	Issue :	Description :
17 Dec 2007	A	ISSUED FOR CC PURPOSES									

The builder shall check and verify all dimensions and verify all errors and omissions to the Architect. Do not scale the drawings. Drawings shall not be used for construction purposes until issued by the Architect for construction.

GARTNER TROVATO ARCHITECTS
12/19 DARCY STREET
PO BOX 1122
NORTH HILL NSW 2900
+612 6921 1411
+612 6921 1422
GTARC@T.COM.AU

Project : New Lift and Garage
209 Riverview Road, AVALON

Client : G & T Dufty

Drawing : Elevations

Drawn/Designed :	LT - AH	Date :	NOV 2007
Project Number :	0728	Scale :	1 : 100 @ (A1)
Drawing No. :	CC-02	Issue :	A

PROPOSED ALTERATIONS & ADDITIONS

209 RIVERVIEW ROAD AVALON

for

MR G. & MRS T. DUFTY

DRAWINGS

7072-S0.00 STRUCTURAL NOTES SHEET 1
7072-S0.01 . STRUCTURAL NOTES SHEET 2
7072-S1.00...FOOTING & LEVEL 1 SLAB PLAN
7072-S1.01...LEVEL 1 SLAB DETAILS - SHEET 1 of 2
7072-S1.02...LEVEL 1 SLAB DETAILS - SHEET 2 of 2
7072-S2.00...LEVEL 2 & LEVEL 3 SLAB PLANS
7072-S2.01 ..LEVEL 2 & 3 SLAB DETAILS - SHT 1 of 2
7072-S2.02...LEVEL 2 & 3 SLAB DETAILS - SHT 2 of 2
7072-S3.00...LEVEL 4 & 5 SLAB PLAN
7072-S3.01...LEVEL 4 & 5 SLAB DETAILS - SHT 1 of 2
7072-S3.02 ..LEVEL 4 & 5 SLAB DETAILS - SHT 2 of 2
7072-S4.00 ..ROOF FRAMING PLAN
7072-S4.01...ROOF FRAMING DETAILS

STRUCTURAL NOTES

GENERAL

G1 THESE DRAWINGS SHALL BE READ IN CONJUNCTION WITH ALL ARCHITECTURAL AND OTHER CONSULTANTS DRAWINGS AND SPECIFICATIONS AND WITH SUCH OTHER WRITTEN INSTRUCTIONS AS MAY BE ISSUED DURING THE COURSE OF THE CONTRACT

G2 THE INFORMATION CONTAINED ON THESE DRAWINGS IS FOR STRUCTURAL ENGINEERING PURPOSES ONLY IN ALL OTHER MATTERS, THE APPROVED ARCHITECTS DRAWINGS SHALL TAKE PRECEDENCE ALL DISCREPANCIES THAT COULD RESULT IN CHANGES TO THE STRUCTURAL DETAILS SHALL BE REFERRED TO THE ENGINEER PRIOR TO PROCEEDING WITH CONSTRUCTION

G3 ALL MATERIALS AND WORKMANSHIP SHALL BE IN ACCORDANCE WITH THE RELEVANT AND CURRENT AUSTRALIAN STANDARDS AND WITH THE BY-LAWS AND ORDINANCES OF THE RELEVANT BUILDING AUTHORITIES

G4 DURING CONSTRUCTION THE STRUCTURE SHALL BE MAINTAINED IN A STABLE CONDITION AND NO PART SHALL BE OVERSTRESSED TEMPORARY BRACING SHALL BE PROVIDED BY THE BUILDER TO KEEP THE WORKS AND EXCAVATIONS STABLE AT ALL TIMES

G5 THE BUILDER SHALL GIVE 48 HOURS NOTICE FOR ALL ENGINEERING INSPECTIONS.

G6 UNLESS NOTED OTHERWISE ALL LEVELS ARE IN METRES AND ALL DIMENSIONS ARE IN MILLIMETRES. ENGINEER'S DRAWINGS SHALL NOT BE SCALED FOR DIMENSIONS ALL DIMENSIONS SHOWN SHALL BE VERIFIED BY THE BUILDER ON SITE

G7 THE STRUCTURAL COMPONENTS DETAILED ON THESE DRAWINGS HAVE BEEN DESIGNED IN ACCORDANCE WITH THE RELEVANT AUSTRALIAN STANDARDS AND LOCAL GOVERNMENT ORDINANCES

G8 WIND LOADS ARE DETERMINED IN ACCORDANCE WITH AS4055 FOR WIND CLASSIFICATION. 'N2' WITH A METAL SHEET ROOF

FOUNDATIONS & EARTHWORKS

F1 FOUNDATIONS HAVE BEEN DESIGNED FOR AN ALLOWABLE BEARING INTENSITY OF 600kPa ON WEATHERED SANDSTONE BEDROCK FOUNDATION MATERIAL TO BE CONFIRMED ON SITE

F2 REFER TO GEOTECHNICAL INVESTIGATION REPORT No 17993VTLet1 PREPARED BY JEFFERY & KATAUSKAS AND DATED 30 08.2005

F3 TOPSOIL INCLUDING GRASS ROOTS IS TO BE REMOVED FROM THE AREA TO SUPPORT SLABS AND FOOTINGS FOOTINGS TO BE CONSTRUCTED AND BACKFILLED AS SOON AS POSSIBLE FOLLOWING EXCAVATION TO AVOID SOFTENING OR DRYING OUT BY EXPOSURE TRENCHES TO BE DEWATERED & CLEANED OUT PRIOR TO CONCRETE PLACEMENT

F4 UNLESS OTHERWISE APPROVED BY THE ENGINEER, THE LIMITS OF EXCAVATIONS NEAR EXISTING FOOTINGS SHALL BE AS SET OUT IN THE DETAIL BELOW

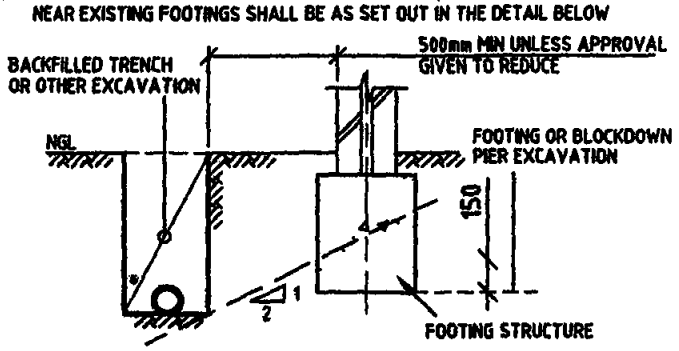

PRIOR TO ANY EXCAVATION NEAR EXISTING FOOTINGS THE BUILDER SHALL DETERMINE THE DEPTH OF FOUNDING OF EXISTING FOOTINGS BY LOCAL INVESTIGATORY EXCAVATION. GENERAL EXCAVATION SHALL NOT PROCEED BELOW A LEVEL 150mm ABOVE THE UNDERSIDE OF EXISTING FOOTINGS UNTIL INSTRUCTION IS OBTAINED FROM THE ENGINEER ON PROCEDURES & PRECAUTIONS TO BE TAKEN

F5 CONTROLLED FILL: SAND FILL UP TO 0.8m DEEP WELL COMPACTED IN NOT MORE THAN 300mm THICK LAYERS BY A VIBRATING PLATE OR VIBRATING ROLLER. NON-SAND FILL UP TO 0.4m DEEP WELL COMPACTED IN LAYERS NOT MORE THAN 150mm DEEP BY A MECHANICAL ROLLER. CLAY FILL SHALL BE MOIST DURING COMPACTION

REINFORCEMENT

R1 ALL REINFORCING BARS SHALL BE GRADE D500N TO AS4671 UNLESS NOTED OTHERWISE. ALL MESH SHALL BE GRADE 500L TO AS4671 AND SHALL BE SUPPLIED IN FLAT SHEETS

R2 REINFORCEMENT NOTATION SHALL BE AS FOLLOWS IN THE FOLLOWING ORDER

NUMBER OF BARS IN GROUP — BAR GRADE AND TYPE
17N20-250
NOMINAL BAR SIZE IN mm — SPACING IN mm

R3 REINFORCEMENT SYMBOLS.

'N' - DENOTES GRADE 500 N BARS TO AS4671 GRADE N.
'R' - DENOTES GRADE 250 R HOT ROLLED PLAIN BARS TO AS1302
'F' - DENOTES HARD-DRAWN WIRE REINFORCING FABRIC TO AS4671.
'W' - DENOTES HARD-DRAWN PLAIN WIRE TO AS1303.
'SL or 'RL' - DENOTES WELDED GRADE 500 REINFORCING FABRIC TO AS 4671

R4 SPLICES IN REINFORCEMENT SHALL BE MADE ONLY IN POSITIONS SHOWN OR OTHERWISE APPROVED IN WRITING BY THE ENGINEER LAPS SHALL BE IN ACCORDANCE WITH AS 3600 AND NOT LESS THAN THE DEVELOPMENT LENGTH FOR EACH BAR
AS SHOWN IN THE TABLE BELOW

SPLICE SCHEDULE		
BAR DIA	TENSION SPLICE LENGTH	COMPRESSION SPLICE LENGTH
N12	475	450
N16	750	600
N20	1000	750
N24	1100	900

R5 REINFORCEMENT IS REPRESENTED DIAGRAMMATICALLY AND NOT NECESSARILY IN TRUE PROJECTION

R6 WELDING OF REINFORCEMENT SHALL NOT BE PERMITTED UNLESS SHOWN ON THE STRUCTURAL DRAWINGS OR APPROVED BY THE ENGINEER.

R7 FABRIC SHALL BE LAPPED 2 TRANSVERSE WIRES PLUS 50mm BUNDLED BARS SHALL BE TIED TOGETHER AT 30 BAR DIAMETER CENTRES WITH 3 WRAPS OF THE WIRE

R8 SLAB REINFORCEMENT SHALL EXTEND AT LEAST 65mm ONTO MASONRY SUPPORT WALLS AND 50% OF BOTTOM REINFORCEMENT SHALL BE COGGED TO ACHIEVE ANCHORAGE AT SIMPLY SUPPORTED ENDS IF THIS CANNOT BE ACHIEVED DUE TO COVER REQUIREMENTS THEN ALL THE BARS SHALL BE COGGED FOR FABRIC THE LAST WELDED CROSS ROD SHALL BE LOCATED OVER THE WALL AND 50mm MINIMUM BEYOND THE FACE OF THE WALL

R9 WHERE TRANSVERSE TIE BARS ARE NOT SHOWN PROVIDE N12-400 SPLICED WHERE NECESSARY AND LAP WITH MAIN BARS 400MM UNLESS NOTED OTHERWISE

R10 NO OPENINGS IN BEAMS OR COLUMNS SHALL BE MADE OTHER THAN THOSE SPECIFICALLY DETAILED FOR OPENINGS IN SLABS UP TO 300mm SQUARE THE REINFORCEMENT SHALL BE DISPLACED TO THE SIDES. FOR OPENINGS BETWEEN 300mm SQUARE AND 600mm SQUARE THE REINFORCEMENT CROSSING THE PROPOSED OPENING SHALL BE CUT AND THE HOLES TRIMMED USING 2N12 BARS TOP AND BOTTOM EXTENDING 1500mm PAST EACH SIDE OF OPENING. OPENINGS LARGER THAN 600mm SQUARE SHALL BE DETAILED BY THE ENGINEER.

R11 JOGGLES TO BARS SHALL COMPRISE A LENGTH OF 12 BAR DIAMETERS BETWEEN BEGINNING AND END OF AN OFFSET OF 1 BAR DIAMETER

R12 ALL REINFORCEMENT SHALL BE FIRMLY SUPPORTED ON MILD STEEL PLASTIC TIPPED CHAIRS PLASTIC CHAIRS OR CONCRETE CHAIRS AT NOT GREATER THAN 1 METRE CENTRES BOTH WAYS AND 800 EACH WAY FOR FABRIC WHEN POURED ON GROUND AS FORMWORK PROVIDE PLATES UNDER ALL BAR CHAIRS
PLASTIC TIPPED STEEL CHAIRS SHALL NOT BE USED ON EXPOSED FACES IN EXPOSURE CLASSIFICATION B1 B2 AND C ONLY PLASTIC OR CONCRETE CHAIRS

R13 SITE BENDING OF REINFORCEMENT SHALL BE AVOIDED IF POSSIBLE WHERE SITE BENDING IS UNAVOIDABLE IT SHALL BE CARRIED OUT COLD WITHOUT THE APPLICATION OF HEAT AND IN ACCORDANCE WITH THE PRACTICE NOTE 'RPN1 OF THE STEEL REINFORCEMENT INSTITUTE OF AUSTRALIA USING MECHANICAL BENDING TOOLS

R14 ALL TIE WIRE FOR REINFORCEMENT SHALL BE GALVANISED

We have viewed this drawing and endorse that recommendations given in our Report No. 17993VTLet1 of (date) 30 August 2005 have been adopted in principle, except for modifications noted or underlined in red which should be adopted.

Signed for this application Date: 12/3/08

WARNING

The stamping of this plan by Insight Building Certifiers Pty Ltd does not relieve

- The applicant's responsibility to obtain approval from Sydney Water or other utilities
- The Structural Engineer of their responsibility to ensure the structural adequacy of this project
- The Applicant Structural Engineer or other Professional of their responsibility to ensure these stamped details are consistent with the issued Construction Certificate Architectural Details

The information contained on this drawing has been prepared for the exclusive use of for this purpose. No liability or responsibility is accepted for use of this information by any third party or for any other project

ISSUE	DESCRIPTION	BY	APR	DATE
A	ISSUED FOR CONSTRUCTION	JC	SW	21.02.08

DESIGNER/ARCHITECT: GABRIER ARCHITECTS
Jeffery and Katauskas Pty Ltd
115 Wicks Road
Macquarie Park NSW 2113
Telephone 9888 5000

CONSULTING ENGINEER: GTA CONSULTANTS
MONA VALE NSW 2103
p +612 9979 4411
f +612 9979 4422
e GTA@G-T.COM.AU

CHARTERED PROFESSIONAL ENGINEER:
SIMON WADDINGTON (BE Hons)
CPEng MIEAust NPER (Structural)
T 02 9400 2966
F 02 9400 2966
M 0414 393 807
E simonwaddington@optusnet.com.au

PROJECT: PROPOSED NEW LIFT & GARAGE at 209 RIVERVIEW ROAD, AVALON for Mr & Mrs G & T DUFTY

DRAWING TITLE: STRUCTURAL NOTES SHEET 1

DESIGN: SW | DATE: JAN 2008
DRAWN: J C | SCALE: N/A
FILENAME: 7072 S0.00 DWG
SIGNED
SIZE: A3
DRAWING No: 7072-S0.00
REV: A

COUNCIL COPY

STRUCTURAL STEEL

S1 ALL WORKMANSHIP AND MATERIALS SHALL BE IN ACCORDANCE WITH AS 4100 AND AS 1554 EXCEPT WHERE VARIED BY THE CONTRACT DOCUMENTS.

S2 UNLESS NOTED OTHERWISE ALL MATERIAL SHALL BE:
- GRADE 250 HOT-ROLLED PLATES COMPLYING WITH AS 3678,
- GRADE 250 HOT-ROLLED FLATS TFC, TFB ANGLES 100x100EA OR 125x75UA AND SMALLER COMPLYING WITH AS 3679 1
- GRADE 300PLUS UB, UC, PFC AND ANGLES 125x125EA OR 150x90UA AND LARGER;
- GRADE 300 WB, WC COMPLYING WITH AS 3679.2;
- GRADE C350 RHS CHS COMPLYING WITH AS 1163;

S3 THREE(3) COPIES OF WORKSHOP FABRICATION DRAWINGS SHALL BE SUBMITTED TO THE ENGINEER FOR REVIEW AT LEAST 7 DAYS PRIOR TO COMMENCEMENT OF FABRICATION AND PERMISSION TO USE OBTAINED PRIOR TO FABRICATION. PERMISSION TO USE DOES NOT RELIEVE THE BUILDER OF THE FULL RESPONSIBILITY FOR DIMENSIONS, FIT AND COMPLIANCE WITH ARCHITECTURAL AND ENGINEERING DRAWINGS

S4 BOLTS:-
4.6/S....COMMERCIAL BOLTS OF GRADE 4.6 TO AS 1111, SNUG TIGHTENED
8.8/S....HIGH STRENGTH STRUCTURAL BOLTS OF GRADE 8.8 TO AS 1252, SNUG TIGHTENED
8 8/TB....HIGH STRENGTH STRUCTURAL BOLTS OF GRADE 8.8 TO AS 1252 FULLY TENSIONED TO AS 4100 AS BEARING JOINT
8 8/TF....HIGH STRENGTH STRUCTURAL BOLTS OF GRADE 8 8 TO AS 1252 FULLY TENSIONED TO AS 4100 AS A FRICTION JOINT WITH FACING SURFACES LEFT UNCOATED
ALL BOLTS SHALL BE M20 GRADE 8.8/S UNLESS NOTED
NO CONNECTION SHALL HAVE LESS THAN 2 BOLTS.
ALL BOLTS, NUTS & WASHERS TO BE GALVANISED
TB AND TF BOLTS TO BE INSTALLED USING APPROVED LOAD INDICATING WASHERS OR BY TURN OF NUT CONTROL OF TENSIONING.

S5 WELDING SHALL BE CARRIED OUT IN ACCORDANCE WITH AS 1554 1 WELDING CONSUMABLES SHALL BE E48XX OR W50X U.N.O. ALL WELD SHALL BE 6 mm CFW SP CATEGORY U.N.O CPBW SHALL BE SP CATEGORY U.N.O. INSPECTION SHALL BE CARRIED OUT TO AS 1554.1. ALL GP/SP WELDS SHALL BE 100% VISUALLY SCANNED. SP WELDS ALLOW FOR 10% VISUAL EXAMINATION U.N.O. BUTT WELDS SHALL BE COMPLETE PENETRATION WELDS TO AS 1554

S6 ALL DETAILS GAUGE LINES ETC. WHERE NOT SPECIFICALLY SHOWN ARE TO BE IN ACCORDANCE WITH AISC DESIGN CAPACITY TABLES FOR STRUCTURAL STEEL AND AISC STANDARDIZED STRUCTURAL CONNECTIONS PLATES TO BE 10mm THICK, EX-STANDARD SQUARE EDGE FLATS U.N.O

S7 PROVIDE SEAL PLATES TO ALL HOLLOW SECTIONS PROVIDE VENT HOLES TO HOLLOW MEMBERS & DRAIN HOLES TO ALL MEMBERS TO BE HOT DIP GALVANISED

S8 IT IS THE BUILDER'S RESPONSIBILITY TO ENSURE THAT STEELWORK IS SECURELY TEMPORARILY BRACED AS NECESSARY TO STABILISE THE STRUCTURE DURING ERECTION.

S9 STRUCTURAL STEELWORK SHALL HAVE THE FOLLOWING SURFACE TREATMENT IN ACCORDANCE WITH THE SPECIFICATION.

ELEMENT	SURFACE CLEANING	PROTECTIVE COATING
INTERNAL	POWER WIRE BRUSHING or ABRASIVE GRIT BLASTING	1 COATRUST INHIBITIVE ALKY[D] PRIMER OR EQUIV + 1 TOP COAT ALL WEATHER GLOSS ACRYLI[C]
EXTERNAL	ABRASIVE GRIT BLASTING (CLASS 2.5) or PICKLING	1 COAT INORGANIC ZINC SILICATE PRIMER OR EQUIV + 1 TOP COAT ALL WEATHER GLOSS ACRYLI[C] WITH UV PROTECTOR
EXTERNAL (ALT.)	PICKLING	HOT DIP GALVANISED

S10 THE BUILDER SHALL PROVIDE ALL CLEATS AND DRILL ALL HOLES NECESSARY FOR FIXING STEEL TO STEEL AND TIMBER TO STEEL WHETHER OR NOT DETAILED ON THE DRAWINGS.
THE FABRICATION AND ERECTION OF THE STRUCTURAL STEELWORK SHALL SUPERVISED BY A QUALIFIED PERSON EXPERIENCED IN SUCH SUPERVISION, ENSURING ALL REQUIREMENTS OF THE DESIGN ARE MET

S11 ALL BEAMS AND RAFTERS SHALL BE FABRICATED AND ERECTED WITH NATURAL CAMBER UP
ALL MEMBERS SHALL BE SUPPLIED IN SINGLE LENGTHS.
SPLICES SHALL ONLY BE PERMITTED IN LOCATIONS SHOWN ON THE STRUCTURAL DRAWINGS.

CONCRETE

C1 ALL WORKMANSHIP AND MATERIALS SHALL BE IN ACCORDANCE WITH AS 3600 CURRENT EDITION WITH AMENDMENTS. READYMIX CONCRETE SUPPLY SHALL COMPLY WITH AS 1379 ALL CEMENT TO BE TYPE 'SL' PORTLAND.

C2 MAXIMUM DRYING SHRINKAGE SHALL BE 600 MICROSTRAIN AT 56 DAYS. PROJECT CONTROL TESTING SHALL BE CARRIED OUT IN ACCORDANCE WITH AS 1379 NO ADMIXTURES SHALL BE USED IN CONCRETE UNLESS APPROVED IN WRITING.

C3 CLEAR CONCRETE COVER TO ALL REINFORCEMENT SHALL BE AS FOLLOWS UNLESS SHOWN OTHERWISE

LOCATION	CONCRETE GRADE (MPa)	CAST AGAINST GROUND	CAST IN FORMS WITH EXPOSURE	CAST IN FORMS & NOT EXPOSED
FOOTINGS / SLABS ON GROUND	25	50	50	30
SUSPENDED SLABS	32	40	40	20

NOTE: WHERE CONCRETE IS POURED ON A VAPOURPROOF MEMBRANE 0 2 mm MINIMUM THICKNESS, THE COVER TO CONCRETE CAST AGAINST GROUND MAY BE REDUCED BY 10 mm

C4 NO ADMIXTURES OTHER THAN LOW RANGE WRA SHALL BE USED IN CONCRETE UNLESS APPROVED IN WRITING.

C5 DEPTHS OF BEAMS ARE GIVEN FIRST AND INCLUDE SLAB THICKNESS

C6 CONCRETE SIZES SHOWN DO NOT INCLUDE THICKNESSES OF APPLIED FINISHES FINISHES NO FINISH WHICH DECREASES COVER IS ALLOWED WITHOUT THE WRITTEN APPROVAL OF THE ENGINEER

C7 FOR CHAMFERS DRIP GROOVES, REGLETS ETC REFER TO ARCHITECT'S DETAILS MAINTAIN COVER TO REINFORCEMENT AT THESE DETAILS.

C8 NO HOLES, CHASES OR EMBEDMENT OF PIPES OTHER THAN THOSE SHOWN ON THE STRUCTURAL DRAWINGS SHALL BE MADE IN CONCRETE MEMBERS WITHOUT THE PRIOR WRITTEN APPROVAL OF THE ENGINEER.

C9 CONSTRUCTION JOINTS AND CLOSING STRIPS SHALL BE USED TO CONTROL AND REDUCE SHRINKAGE CRACKING IN WALLS AND FLOORS AND COLD JOINTS IN LARGE POURS THESE JOINTS SHALL BE PLANNED IN ADVANCE TO THE APPROVAL OF THE ENGINEER.

C10 THE FINISHED CONCRETE SHALL BE A DENSE HOMOGENEOUS MASS COMPLETELY FILLING THE FORMWORK THOROUGHLY EMBEDDING THE REINFORCEMENT AND FREE OF STONE POCKETS. ALL CONCRETE INCLUDING SLABS ON GROUND AND FOOTINGS SHALL BE COMPACTED WITH MECHANICAL VIBRATORS

C11 CURING OF ALL CONCRETE IS TO BE ACHIEVED BY KEEPING SURFACES CONTINUOUSLY WET FOR A PERIOD OF 3 DAYS AND PREVENTION OF LOSS OF MOISTURE FOR A TOTAL OF 7 DAYS FOLLOWED BY A GRADUAL DRYING OUT APPROVED SPRAYED ON CURING COMPOUNDS COMPLYING WITH AS 3799 MAY BE USED WHERE NO FLOOR FINISHES ARE PROPOSED POLYTHENE SHEETING OR WET HESSIAN MAY BE USED IF PROTECTED FROM WIND AND TRAFFIC.

C12 CONDUITS, PIPES, ETC SHALL ONLY BE LOCATED IN THE MIDDLE ONE THIRD OF SLAB DEPTH AND SPACED AT NOT LESS THAN 3 DIAMETERS AND SHALL NOT BE PLACED WITHIN THE REINFORCEMENT COVER

C13 REPAIRS TO CONCRETE SHALL NOT BE ATTEMPTED WITHOUT THE PERMISSION OF THE ENGINEER.

We have viewed this drawing and endorse that recommendations given in our Report No. 17993VT3Akpf (date) 30 August 2005 have been adopted in principle, except for modifications noted or underlined in red which should be adopted

Signed: [signature] ASSOCIATE Date: 12/3/06

For Jeffery and Katauskas Pty Ltd
115 Wicks Road
Macquarie Park NSW 2113
Telephone 9888 5000

FORMWORK

CF1 THE DESIGN, CONSTRUCTION CERTIFICATION AND PERFORMANCE OF THE FORMWORK AND FALSEWORK IS THE RESPONSIBILITY OF THE BUILDER, EXCEPT TO THE EXTENT THAT THE FORMWORK DESIGN IS SHOWN ON THE DRAWINGS.

CF2 DESIGN AND CONSTRUCTION AND STRIPPING TIMES TO COMPLY WITH AS 3610 AND AS 3600 UNLESS OTHERWISE APPROVED BY THE ENGINEER

CF3 DURING CONSTRUCTION, SUPPORT PROPPING WILL BE REQUIRED WHERE LOADS FROM STACKED MATERIALS, FORMWORK AND OTHER SUPPORTED SLABS INDUCE LOADS IN A SLAB OR BEAM WHICH EXCEED THE DESIGN LOAD FOR STRENGTH OR SERVICEABILITY AT THAT AGE. ONCE THE NOMINATED 28 DAY STRENGTH HAS BEEN ATTAINED THESE LOADS SHALL NOT EXCEED THE DESIGN SUPERIMPOSED LOADS SET OUT IN THE GENERAL NOTES

CF4 THE FORMWORK SHALL NOT BE DESIGNED TO RELY ON RESTRAINT OR SUPPORT FROM THE PERMANENT STRUCTURE WITHOUT PRIOR APPROVAL FROM THE ENGINEER. THE FORMWORK CONTRACTOR SHALL PROVIDE FORMWORK CERTIFICATION AS REQUIRED BY THE WORKCOVER AUTHORITY OF NSW

CF5 DO NOT PLACE PERMANENT LOADS INCLUDING MASONRY WALLS ON THE CONCRETE STRUCTURE UNTIL AFTER FORMWORK AND PROPPING IS REMOVED

CF6 DESIGN INFORMATION CONCERNING THE FOUNDATION FORMWORK SHALL BE DETERMINED FROM THE CONDITIONS EXISTING ON SITE AT THE TIME OF CONSTRUCTION. REFER ALSO TO THE GEOTECHNICAL REPORT WHERE AVAILABLE.

CF7 UNLESS NOTED OTHERWISE PROVIDE UPWARD CAMBER TO FORMWORK OF CANTILEVERS OF 'L /120 WHERE 'L IS THE SHORTEST PROJECTION BEYOND COLUMN OR WALL FACE, AND TO FORMWORK OF SLABS WHERE NOTED ON PLAN. MAINTAIN THE SLAB AND BEAM DEPTHS SHOWN

BRICKWORK

Bk1 ALL MATERIALS AND WORKMANSHIP TO BE TO AS 3700

Bk2 ONLY LOAD BEARING MASONRY WALLS ARE SHOWN UNDER CONCRETE SLABS

Bk3 MINIMUM CLAY BRICK COMPRESSIVE STRENGTH TO BE 20MPa. RATE OF ABSORPTION TO BE LESS THAN 1.5KG/M2/MIN AT THE TIME OF LAYING CLAY BRICKS SHALL BE AT LEAST 30 DAYS OUT OF THE KILN AND WILL OFTEN REQUIRE PRE-WETTING UNLESS PROOF OF A MOISTURE EXPANSION LESS THAN 0.6MM/M IS PRODUCED. UNLESS NOTED OTHERWISE MORTAR FOR CLAY BRICKWORK IS TO BE CEMENT: LIME: SAND IN THE RATIO OF 1 : 1 : 6 AND THE WATER RETENTIVITY MUST BE AT LEAST 90%. NO ADDITIVES SHALL BE USED UNLESS APPROVED IN WRITING BRICKWORK IS TO BE ADEQUATELY CURED PRIOR TO CONSTRUCTION OF SUSPENDED SLABS OVER.

Bk4 UNLESS NOTED OTHERWISE CLAY BRICKWORK IS TO CONTAIN MOVEMENT JOINTS 20MM WIDE AT MAXIMUM SPACING OF 10M (15M IN INDUSTRIAL USE) AND ARE TO CONTAIN 40MM TAR IMPREGNATED POLYURETHANE STRIP WHERE INTERNAL SKIN IS INTERRUPTED BY STEEL FRAMES THE ABOVE JOINTING APPLIES TO EXTERNAL SKIN ONLY

Bk5 ALL MASONRY SUPPORTING OR SUPPORTED BY CONCRETE FLOORS SHALL BE PROVIDED WITH VERTICAL JOINTS TO MATCH ANY CONTROL JOINTS IN THE CONCRETE.

Bk6 NON LOAD BEARING WALLS BUILT PRIOR TO POURING CONCRETE SHALL BE SEPARATED FROM CONCRETE ABOVE BY 16 mm THICK CLOSED CELL POLYSTYRENE STRIP WHERE BUILT AFTER CONCRETE IS POURED LEAVE 12mm CLEAR OF CONCRETE SOFFIT

Bk7 ALL CAVITY CONSTRUCTION IS TO HAVE STAINLESS STEEL WALL TIES INSTALLED AS PER CLAUSE 3.8, AS 3700

Bk8 BRICKWORK SUPPORTING SLABS AND BEAMS SHALL BE TROWELLED SMOOTH WITH MORTAR FILLING ALL VOIDS. TWO LAYERS OF MALTHOID SHALL BE PLACED FULL WIDTH ACROSS SUCH LOAD BEARING SURFACES EXCEPT WHERE PROPRIETARY BEARING STRIP IS NOTED OR ALTERNATIVE DETAIL IS DOCUMENTED THE HEADS OF LOAD BEARING WALLS SHALL NOT EXTEND ABOVE THE SOFFIT OF THE CONCRETE SLAB ABOVE.

Bk9 ALL DOUBLE SKIN SOLID WALLS SUCH AS 230mm THICK BRICKWORK SHALL BE BONDED BY A HEADER COURSE EVERY 4th COURSE.

TIMBER

T1 ALL WORKMANSHIP AND MATERIALS SHALL BE IN ACCORDANCE WITH AS1684 AND AS1720 1.

T2 TIMBER TO BE SEASONED & MINIMUM GRADE F7 UNLESS NOTED OTHERWISE.

T3 ALL BOLTS, NUTS AND WASHERS FOR TIMBER CONNECTIONS TO BE HOT-DIP GALVANISED & GRADE 4 6. WHERE POSSIBLE, BOLTS SHALL BE RETIGHTENED AT THE END OF THE MAINTAINANCE PERIOD. BOLT HOLES SHALL BE DRILLED NO MORE THAN 1 mm OVERSIZE. WASHERS UNDER ALL HEADS AND NUTS SHALL BE AT LEAST 2.5 x BOLT DIA.

T4 MINIMUM BOLT SPACINGS IN TIMBER TO BE 5xBOLT DIAMETER. MIN EDGE DISTANCES FOR BOLTED CONNECTIONS TO BE 4xBOLT DIAMETER. MIN END DISTANCE FOR BOLTED CONNECTIONS TO BE 5xBOLT DIAMETER

T5 MINIMUM TIMBER CONNECTIONS TO BE NOMINAL FIXINGS IN ACCORDANCE WITH AS 1684 UNLESS NOTED OTHERWISE.

T6 TIE-DOWN SHALL BE IN ACCORDANCE WITH AS1684 2 SECTION 9 UNLESS NOTED OTHERWISE.

T7 ALL TIMBER JOINTS AND NOTCHES ARE TO BE 100mm MINIMUM AWAY FROM LOOSE KNOTS, SEVERE SLOPING GRAIN, GUM VEINS OR OTHER MINOR DEFECTS

T8 ALL TIMBER TO BE EITHER PLANTATION TIMBERS, TIMBER PRODUCTS MANUFACTURED FROM SUSTAINABLY MANAGED FORESTS OR RECYCLED TIMBERS

T9 EXTERNAL TIMBER SHALL BE EITHER HARDWOOD DURABILITY CLASS I OR II TO AS 1720.2 OR IMPREGNATED PINE GRADE F7, PRESSURE TREATED TO AS1604 AND RE-DRIED PRIOR TO USE. SUPPLEMENTARY TREATMENT SHALL BE APPLIED TO ALL CUT SURFACES SUPPLY SUPPORTING DOCUMENTATION FOR PRESERVATIVE TREATMENT

BLOCKWORK

BL1 ALL WORKMANSHIP AND MATERIALS SHALL BE IN ACCORDANCE WITH AS3700

BL2 STRENGTHS OF MASONRY UNITS AND TYPE OF MORTAR SHALL BE AS FOLLOWS
CHARACTERISTIC UNCONFINED COMPRESSIVE STRENGTH f'uc = 15 MPa
MORTAR (CEMENT : LIME : SAND) = 1 : 0 25 : 3
MORTAR ADMIXTURES SHALL NOT BE USED WITHOUT THE WRITTEN APPROVAL OF THE SUPERINTENDENT

BL3 ONLY LOAD BEARING MASONRY WALLS ARE SHOWN UNDER CONCRETE SLABS

BL4 OTHER THAN REINFORCED CONCRETE BLOCKWORK, MASONRY SUPPORTING SLABS AND BEAMS SHALL BE TROWELLED SMOOTH WITH MORTAR FILLING ALL VOIDS. TWO LAYERS OF MALTHOID SHALL BE PLACED FULL WIDTH ACROSS SUCH LOAD BEARING SURFACES EXCEPT WHERE PROPRIETARY BEARING STRIP IS NOTED OR ALTERNATIVE DETAIL IS DOCUMENTED THE HEADS OF LOAD BEARING WALLS SHALL NOT EXTEND ABOVE THE SOFFIT OF THE CONCRETE SLAB ABOVE.

BL5 ALL MASONRY SUPPORTING OR SUPPORTED BY CONCRETE FLOORS SHALL BE PROVIDED WITH VERTICAL JOINTS TO MATCH ANY CONTROL JOINTS IN THE CONCRETE.

BL6 NO CHASES OR RECESSES ARE PERMITTED IN LOAD BEARING MASONRY WITHOUT THE APPROVAL OF THE ENGINEER.

BL7 PROVIDE VERTICAL CONTROL JOINTS AT 10 m MAX. CENTRES GENERALLY, AND 5 m MAX. FROM CORNERS FOR BRICKWORK AND UNREINFORCED BLOCKWORK

BL8 REFER TO CONCRETE NOTES FOR DE-PROPPING PRIOR TO CONSTRUCTION OF MASONRY WALLS ON SUSPENDED SLABS.

BL9 REINFORCED CONCRETE BLOCKWORK SHALL COMPLY WITH THE FOLLOWING, UNLESS NOTED:
* PROVIDE CLEANOUT HOLES 100 mm SQUARE MINIMUM AT BASE OF ALL WALLS AND ROD CORE HOLES TO REMOVE PROTRUDING MORTAR FINS PRIOR TO GROUTING
* CORE FILLING GROUT SHALL BE :- f'c = 20 MPa
MINIMUM CEMENT CONTENT = 300 kg/m,
SLUMP = 230 ± 30 mm.
* REINFORCEMENT PROJECTING FROM FOUNDATION OR SLABS INTO CORES SHALL BE SET ACCURATELY IN PLACE USING TEMPLATES TO ALIGN WITH THE CENTRE OF THE LENGTH OF CORES AND WITH COVER AS NOTED. WHERE HORIZONTAL BARS ARE INDICATED THE WEBS OF THE BLOCKS BELOW THE BARS SHALL BE CUT DOWN TO ACCOMMODATE THE BARS
* GROUT ALL CORES IN REINFORCED BLOCKWORK UNLESS OTHERWISE NOTED HEIGHT OF BLOCKWORK TO BE GROUTED ON ONE DAY SHALL BE 2400mm. GROUT SHALL BE PLACED IN LIFTS OF 1200mm MAXIMUM AND COMPACTED BY POKER VIBRATOR. A SHORT TIME SHOULD ELAPSE BETWEEN SUCCESSIVE LIFTS TO ALLOW PLASTIC SETTLEMENT TO OCCUR.
* PROVIDE 50 mm COVER FROM THE OUTSIDE OF THE BLOCKWORK UNLESS NOTED.

BL10 BACKFILL TO RETAINING WALLS SHALL BE FREE DRAINING GRANULAR MATERIAL. PROVIDE SUBSOIL DRAIN AT BASE OF WALL. DO NOT BACKFILL UNTIL 14 DAYS AFTER GROUTING, OR IF APPLICABLE, AFTER RESTRAINING SLAB OVER HAS BEEN POURED AND CURED FOR 7 DAYS. BACKFILL SHALL BE COMPACTED TO 98% STANDARD MAXIMUM DRY DENSITY AT OPTIMUM MOISTURE CONTENT ± 2 %.

The information contained on this drawing has been prepared for the exclusive use of the Client for this project No liability or responsibility is accepted for use of this information by any third party or for any other project

ISSUE	DESCRIPTION	BY	APR	DATE

DESIGNER/ARCHITECT:
GARTNER TROVATO ARCHITECTS
a 12/19 BUNGAN STREET MONA VALE, NSW 2103
p +612 9979 4411
f +612 9979 4422
e GTA@G-T COM.AU

CHARTERED PROFESSIONAL ENGINEER:
SIMON WADDINGTON (BE Hons)
CPEng MIEAust NPER (Structural)
T 02 9400 2986
F 02 9400 2986
M 0414 393 807
E simonwaddington@optusnet.com.au

PROJECT: PROPOSED NEW LIFT & GARAGE at 209 RIVERVIEW ROAD, AVALON for Mr & Mrs G & T DUFTY

DRAWING TITLE: STRUCTURAL NOTES SHEET 2

DESIGN: S.W.		DATE: JAN 2008	
DRAWN: J.C.		SCALE: N/A	
FILENAME: 7072 S0.01.DWG			
SIGNED: [signature]			SIZE A3
DRAWING No: 7072-S0.01			REV A

NOTES
- FOR GENERAL NOTES REFER DRG No 7072-S0 00 & S0 01

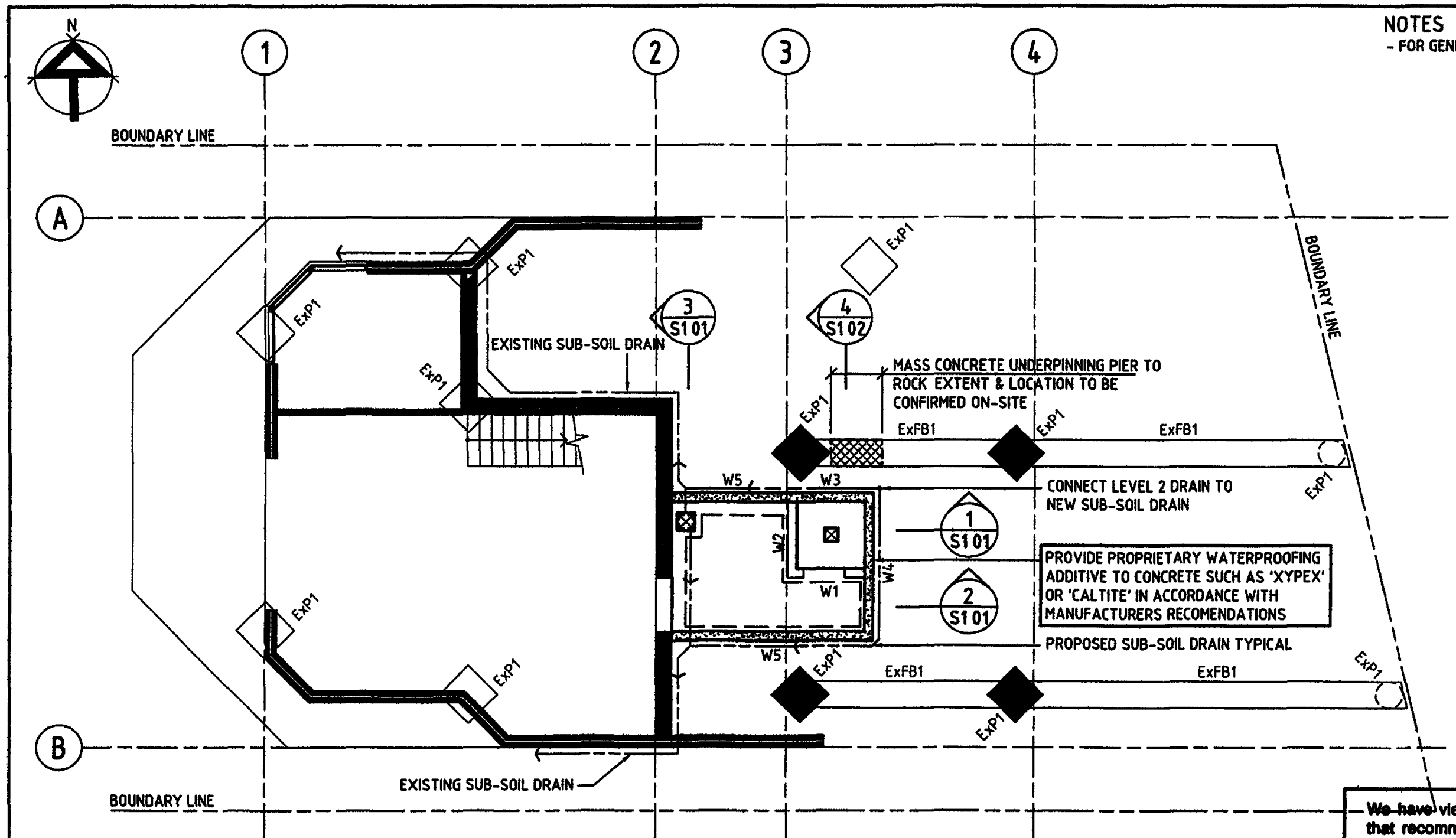

FOOTING & LEVEL 1 SLAB PLAN

SCALE 1 100

1. ALL SLABS TO BE 150mm THICK THROUGHOUT, UNLESS NOTED OTHERWISE AND POURED OVER VAPOURPROOF MEMBRANE OVERLYING 50mm NOMINAL SAND BLINDING LAYER
2. ALL SLABS TO BE REINFORCED WITH SL82 FABRIC TOP THROUGHOUT, UNLESS NOTED OTHERWISE, 30mm TOP & SIDE COVERS, PLUS EXTRA BARS AS SHOWN ON PLAN & SECTIONS.

We have viewed this drawing
that recommendations given in our report
No. 17998(1)(Sheet) of (date) 20 August 2005
have been adopted in principle, except for
modifications noted or underlined in red
which should be adopted

Signed [signature] ASSOCIATE Date 12/3/08

For: Jeffery and Katauskas Pty Ltd
115 Wicks Road
Macquarie Park NSW 2113
Telephone 9888 5000

The information contained on this drawing has been prepared for the exclusive use of the Client for this project No liability or responsibility is accepted for use of this information by any third party or for any other project

ISSUE	DESCRIPTION	BY	APR	DATE
A	ISSUED FOR CONSTRUCTION	JC	SW	21.02.08
01	PRELIMINARY - FOR INFORMATION ONLY	JC	SW	05.02.08

DESIGNER/ARCHITECT:
GARTNER TROVATO ARCHITECTS
a 12/19 BUNGAN STREET MONA VALE, NSW 2103
p +612 9979 4411
f +612 9979 4422
e GTA@G-T COM.AU

CHARTERED PROFESSIONAL ENGINEER:
SIMON WADDINGTON (BE Hons)
CPEng MIEAust NPER (Structural)
T 02 9400 2966
F 02 9400 2966
M 0414 393 807
E. simonwaddington@optusnet.com.au

PROJECT:
PROPOSED NEW LIFT & GARAGE
at 209 RIVERVIEW ROAD, AVALON
for Mr & Mrs G & T DUFTY

DRAWING TITLE:
FOOTING & LEVEL 1 SLAB PLAN

DESIGN: S W	DATE: JAN 2008		
DRAWN: J C	SCALE: 1:100		
FILENAME: 7072 - S1.00 DWG			
SIGNED: [signature]		SIZE A3	
DRAWING No: 7072-S1.00		REV A	

NOTES

- FOR GENERAL NOTES REFER DRG No 7072-S0 00 & S0 01

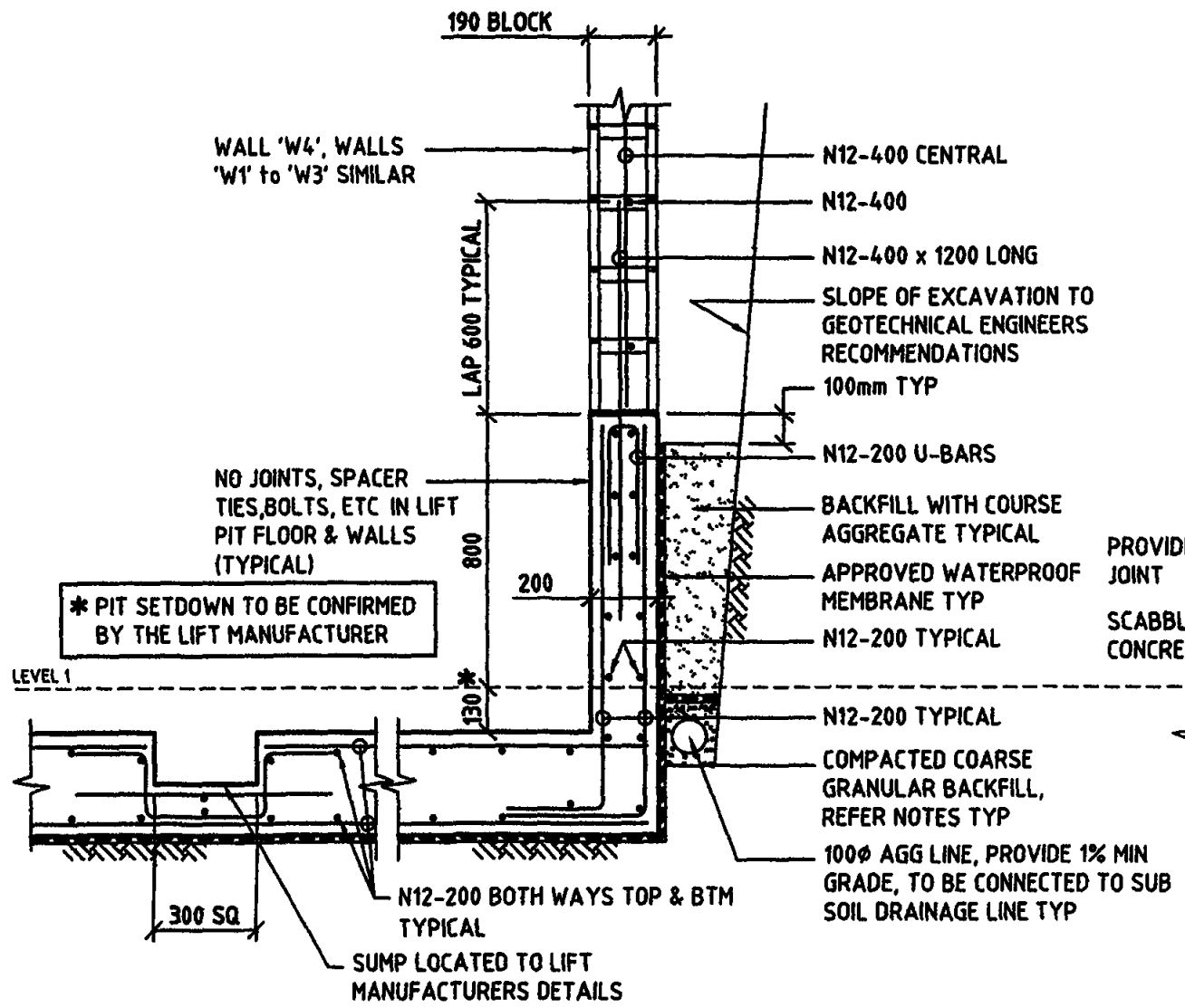

SECTION 1 / S100
SCALE 1:20

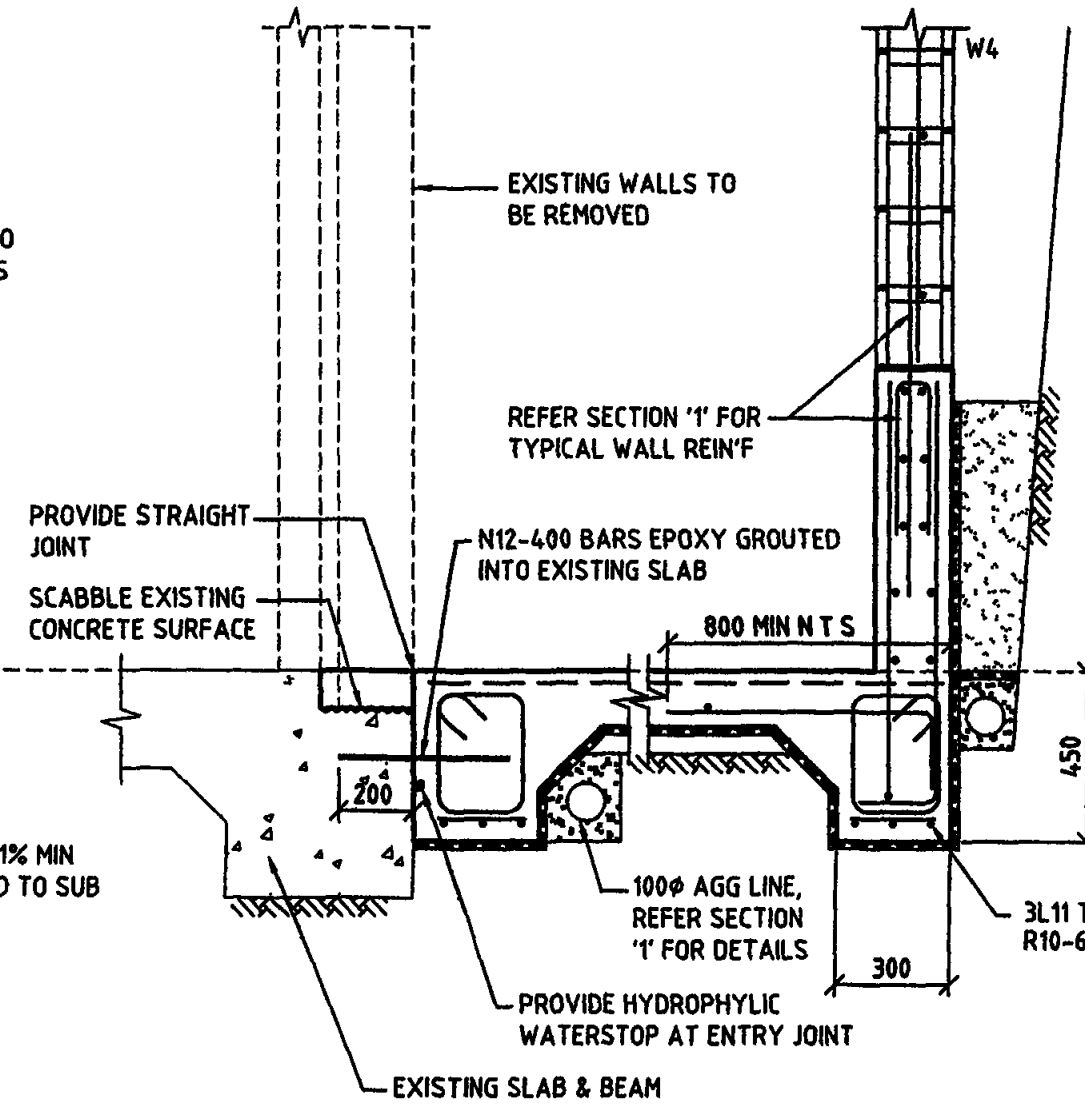

SECTION 2 / S100
SCALE 1:20

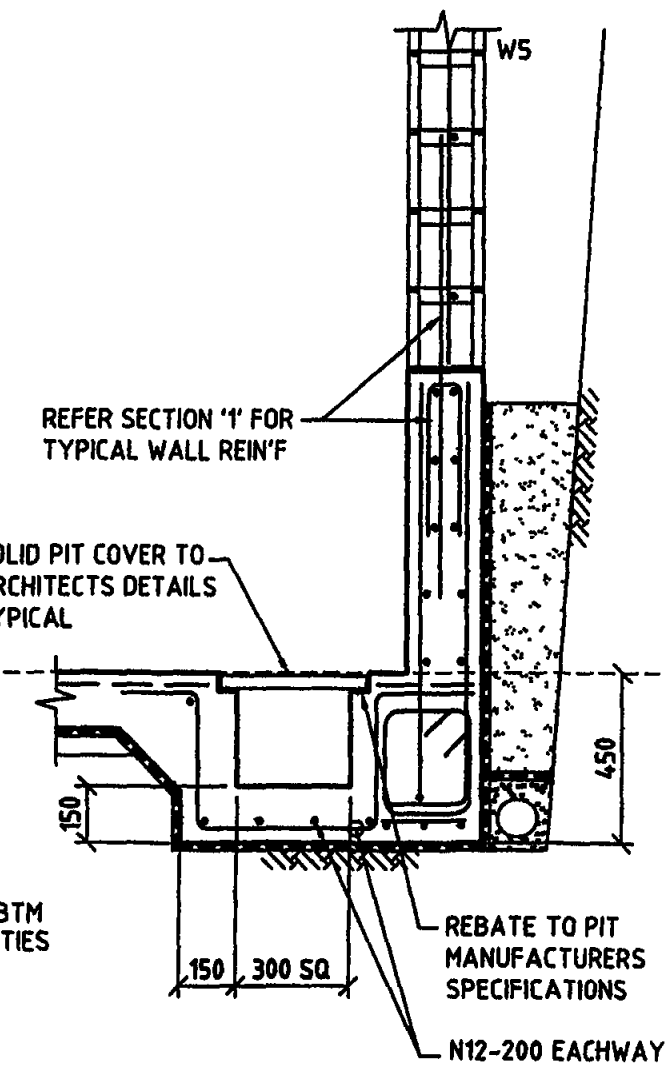

SECTION 3 / S100
SCALE 1:20

NOTE:

1. ALL HORIZONTAL RETAINING WALL REINFORCEMENT SHALL BE HOT DIP GALVANISED IF STANDARD BLOCKWORK IS USED
2. HORIZONTAL RETAINING WALL REINFORCEMENT SHALL NOT REQUIRE GALVANISING IF 'H' BLOCKS ARE USED

We have viewed this drawing and endorse that recommendations given in our Report No. 17993/17318 of (date) 30 August 2005 have been adopted in principle, except for modifications noted or underlined in red which should be adopted

Signed [signature] ASSOCIATE Date: 12/3/08

For: Jeffery and Katauskas Pty Ltd
115 Wicks Road
Macquarie Park NSW 2113
Telephone 9888 5000

The information contained on this drawing has been prepared for the exlusive use of the Client for this project
No liability or responsibility is accepted for use of this information by any third party or for any other project

ISSUE	DESCRIPTION	BY	APR	DATE
A	ISSUED FOR CONSTRUCTION	JC	SW	21.02.08
01	PRELIMINARY - FOR INFORMATION ONLY	JC	SW	05.02.08

ARCHITECT:
GARTNER TROVATO ARCHITECTS
a 12/19 BUNGAN STREET MONA VALE, NSW 2103
p +612 9979 4411
f +612 9979 4422
e GTA@G-T COM.AU

CHARTERED PROFESSIONAL ENGINEER:
SIMON WADDINGTON (BE Hons)
CPEng MIEAust NPER (Structural)
T 02 9400 2986
F 02 9400 2986
M 0414 393 807
E. simonwaddington@optusnet.com.au

PROJECT:
PROPOSED NEW LIFT & GARAGE
at 209 RIVERVIEW ROAD, AVALON
for. Mr & Mrs G & T DUFTY

DRAWING TITLE
LEVEL 1 SLAB DETAILS - SHT 1 of 2

DESIGN: S W | DATE: JAN 2008
DRAWN: J C | SCALE: 1:20
FILENAME: 7072 - S1 01.DWG
SIGNED: [signature]
SIZE A3
DRAWING No: 7072-S1 01
REV A

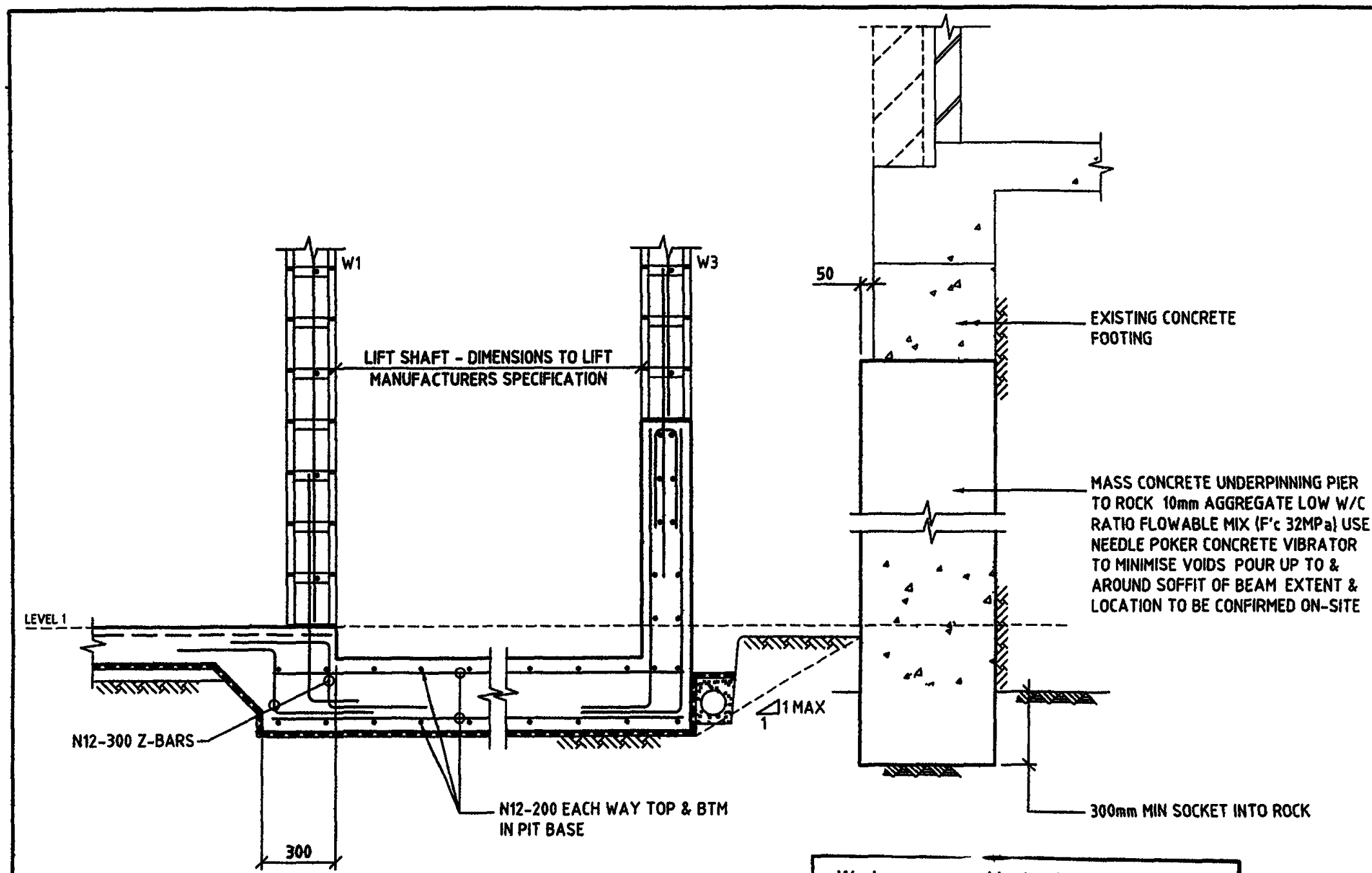

SECTION 4 / S100
SCALE 1 20

NOTES

- FOR GENERAL NOTES REFER DRG No 7072-S0 00 & S0 01

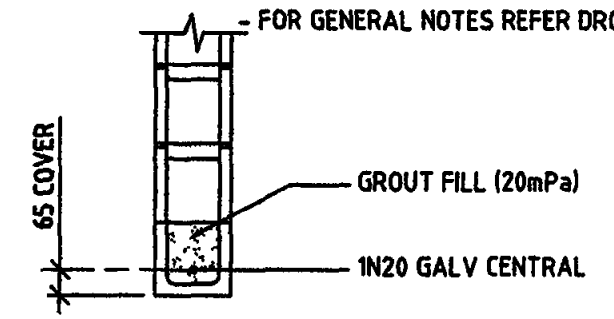

SECTION OVER LIFT DOOR OPENING

TYPICAL BLOCKWORK BOND BEAM DETAIL
SCALE 1 20

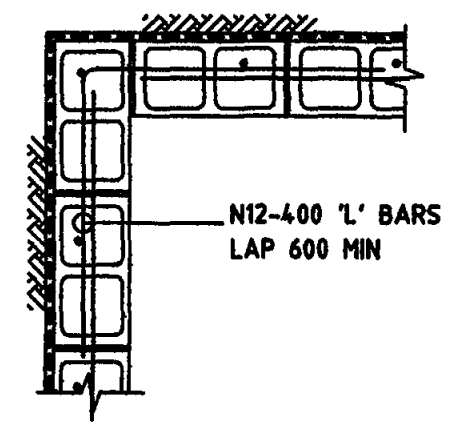

TYPICAL BLOCKWORK CORNER DETAIL
SCALE 1 20

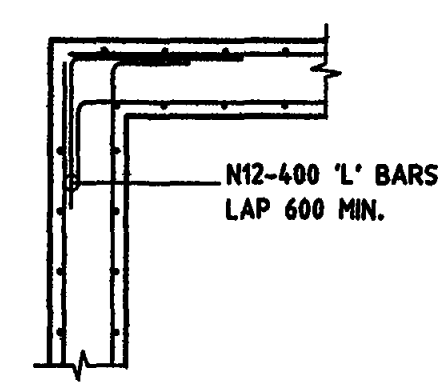

TYPICAL CONCRETE CORNER DETAIL
SCALE 1 20

We have viewed this drawing and endorse that recommendations given in our Report No 17993-4136-1 of (date) 30 August 2005 have been adopted in principle, except for modifications noted or underlined in red which should be adopted.

Signed [signature] Date: 12/3/08
Associate

For Jeffery and Katauskas Pty Ltd
115 Wicks Road
Macquarie Park NSW 2113
Telephone 9888 5000

The information contained on this drawing has been prepared for the exlusive use of the Client for this project
No liability or responsibility is accepted for use of this information by any third party or for any other project

ISSUE	DESCRIPTION	BY	APR	DATE
A	ISSUED FOR CONSTRUCTION	JC	SW	21.02.08
01	PRELIMINARY - FOR INFORMATION ONLY	JC	SW	05.02.08

ARCHITECT:
GARTNER TROVATO ARCHITECTS
a 12/19 BUNGAN STREET MONA VALE, NSW 2103
p +612 9979 4411
f +612 9979 4422
e GTA@G-T.COM.AU

CHARTERED PROFESSIONAL ENGINEER:
SIMON WADDINGTON (BE Hons)
CPEng MIEAust NPER (Structural)
T 02 9400 2966
F 02 9400 2966
M 0414 393 807
E. simonwaddington@optusnet.com.au

PROJECT:
PROPOSED NEW LIFT & GARAGE
at 209 RIVERVIEW ROAD, AVALON
for Mr & Mrs G & T DUFTY

DRAWING TITLE: LEVEL 1 SLAB DETAILS - SHT 2 of 2

DESIGN: S W	DATE: JAN 2008		
DRAWN J C	SCALE: 1:20		
FILENAME: 7072 - S1.02.DWG			
SIGNED:		SIZE: A3	
DRAWING No: 7072-S1 02		REV A	

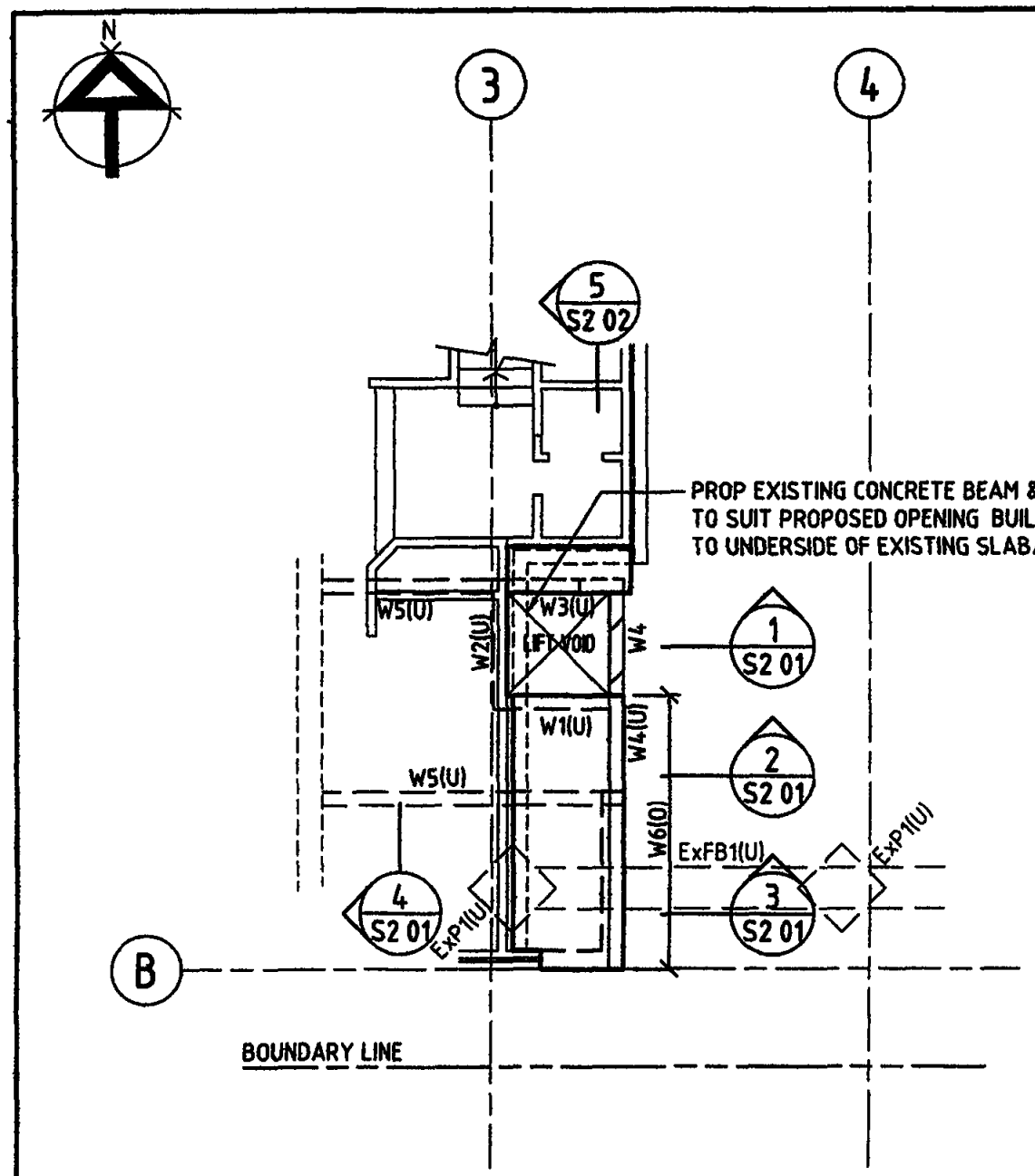

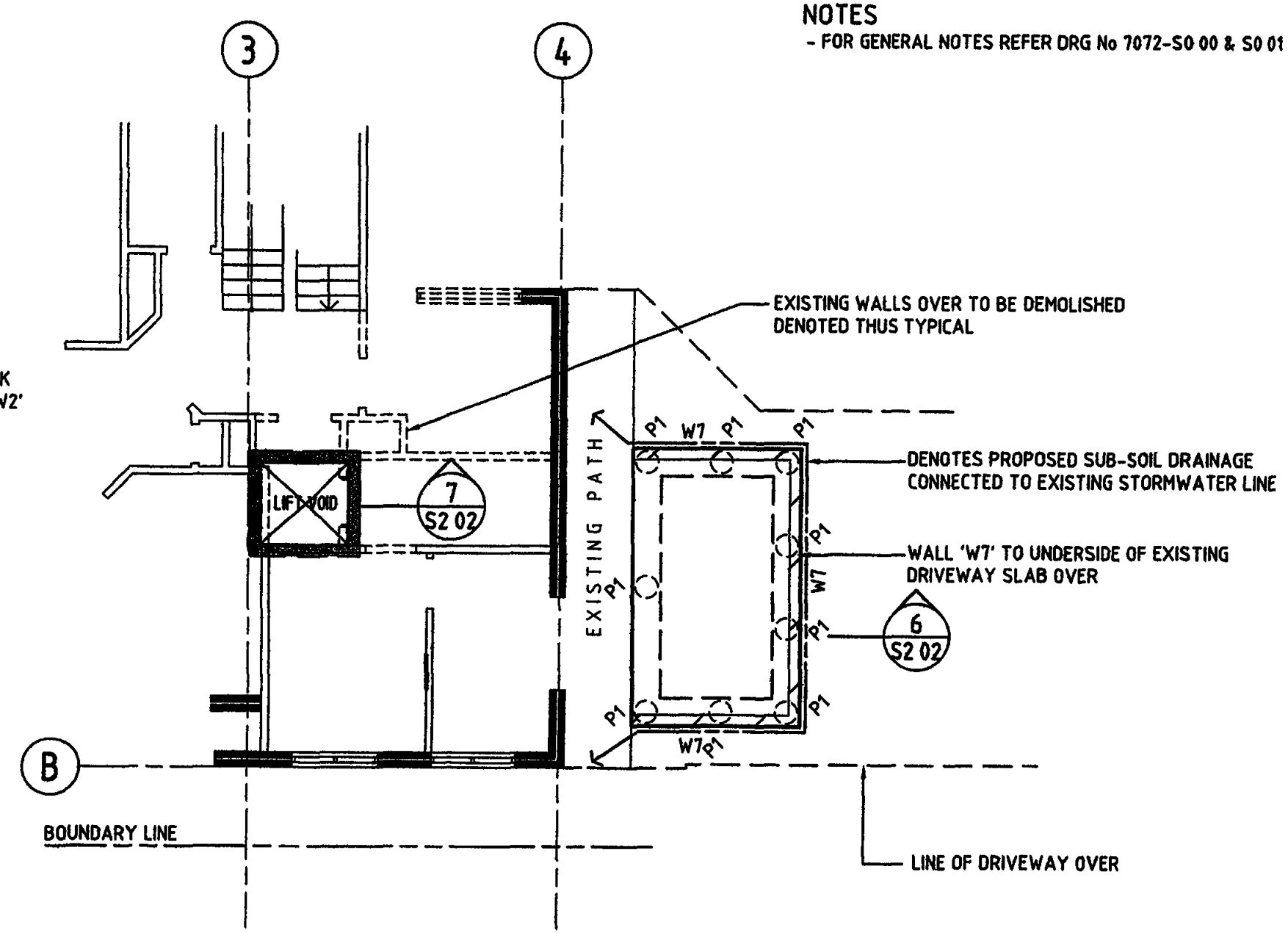

NOTES

- FOR GENERAL NOTES REFER DRG No 7072-S0 00 & S0 01

LEVEL 2 SLAB PLAN

SCALE 1 100

1. ALL SLABS TO BE 150mm THICK THROUGHOUT, UNLESS NOTED OTHERWISE
2. ALL SLABS TO BE REINFORCED WITH SL82 FABRIC TOP & BTM THROUGHOUT, UNLESS NOTED OTHERWISE, PLUS EXTRA BARS AS SHOWN ON PLAN & SECTIONS.
3. SLABS ON-GROUND TO BE POURED OVER VAPOURPROOF MEMBRANE OVERLYING 50mm NOMINAL SAND BLINDING LAYER

LEVEL 3 SLAB PLAN

SCALE 1 100

1. ALL SLABS TO BE 200mm THICK THROUGHOUT, UNLESS NOTED OTHERWISE
2. ALL SLABS TO BE REINFORCED WITH SL82 FABRIC TOP & N12-300 BTM THROUGHOUT, UNLESS NOTED OTHERWISE, PLUS EXTRA BARS AS SHOWN ON PLAN & SECTIONS.
3. SLABS ON-GROUND TO BE POURED OVER VAPOURPROOF MEMBRANE OVERLYING 50mm NOMINAL SAND BLINDING LAYER

We have reviewed this drawing and endorse that recommendations given in our Report 17593/1 SLR1 of (date) 30 August 2006 have been applied in principle, except for comments noted underlined in red which should be adopted

Signed ASSOCIATE Date: 12/3/2008

For Jeffery and Katauskas Pty Ltd
115 Wicks Road
Macquarie Park NSW 2113
Telephone 9888 5000

The information contained on this drawing has been prepared for the exclusive use of the Client for this project No liability or responsibility is accepted for use of this information by any third party or for any other project

ISSUE	DESCRIPTION	BY	APR	DATE
A	ISSUED FOR CONSTRUCTION	JC	SW	21.02.08
01	PRELIMINARY - FOR INFORMATION ONLY	JC	SW	05.02.08

ARCHITECT:
GARTNER TROVATO ARCHITECTS
a 12/19 BUNGAN STREET MONA VALE, NSW 2103
p +612 9979 4411
f +612 9979 4422
e GTA@G-T COM.AU

CHARTERED PROFESSIONAL ENGINEER:
SIMON WADDINGTON (BE Hons) CPEng MIEAust NPER (Structural)
T 02 9400 2986
F 02 9400 2986
M. 0414 393 807
E. simonwaddington@optusnet.com.au

PROJECT:
PROPOSED NEW LIFT & GARAGE
at 209 RIVERVIEW ROAD, AVALON
for Mr & Mrs G & T DUFTY

DRAWING TITLE:
LEVEL 2 & LEVEL 3 SLAB PLANS

DESIGN: S W	DATE: JAN 2008
DRAWN: J C	SCALE: 1:100
FILENAME: 7072 - S2.00.DWG	
SIGNED:	SIZE A3
DRAWING No: 7072-S2.00	REV A

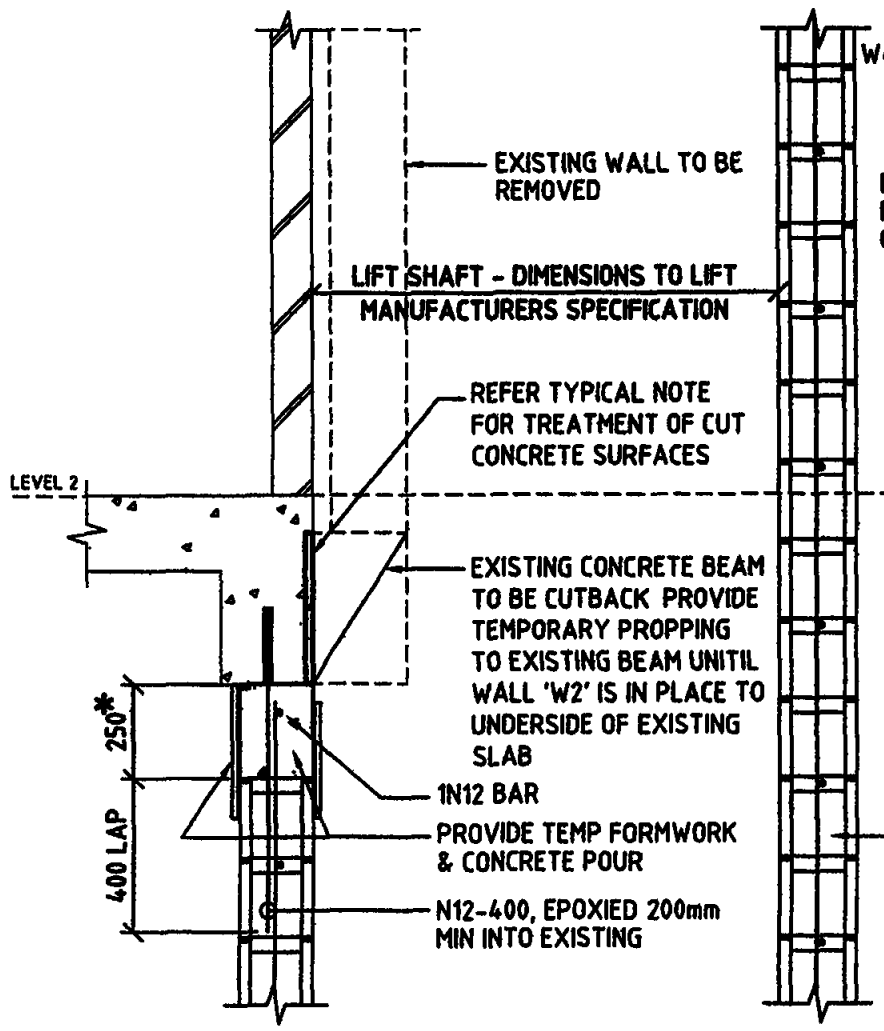

SECTION 1 / S2 00
SCALE 1:20

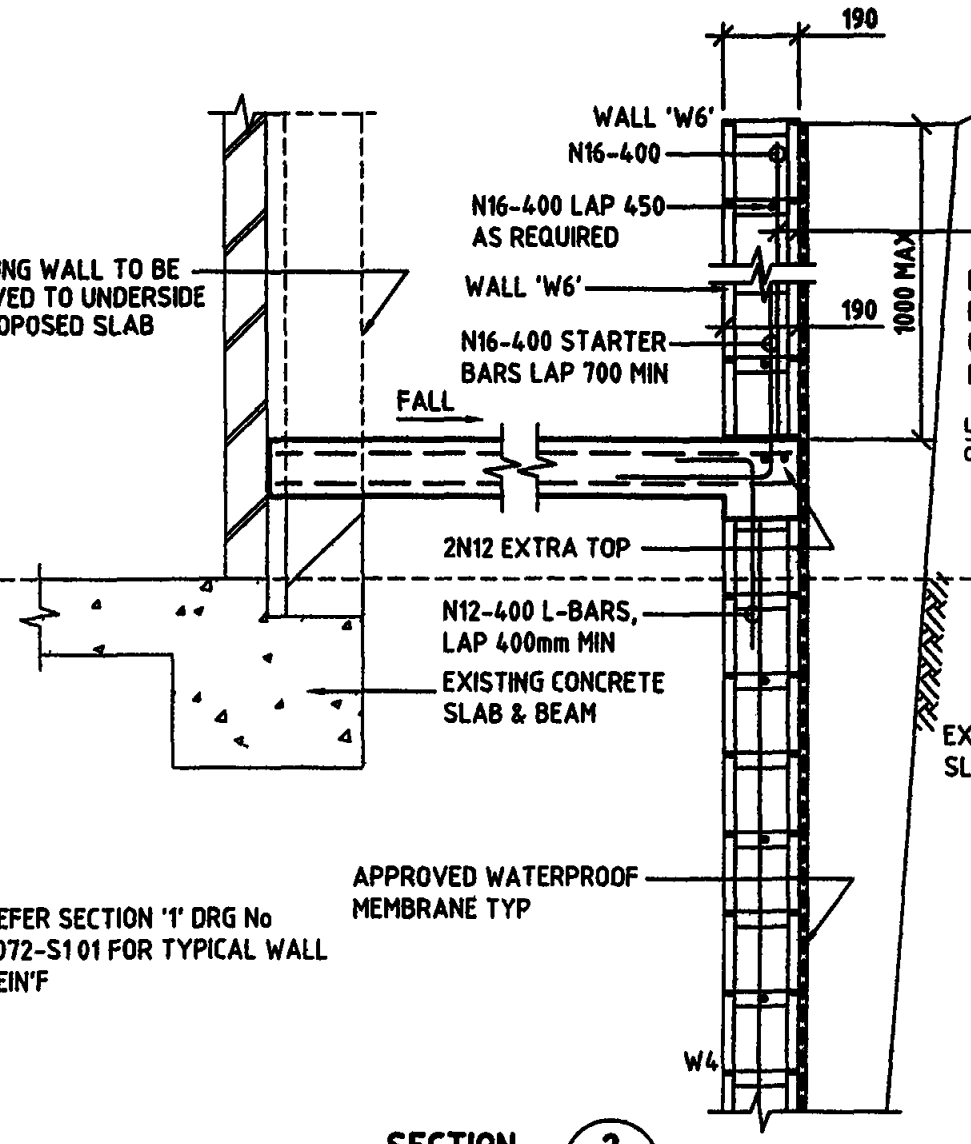

SECTION 2 / S2 00
SCALE 1:20

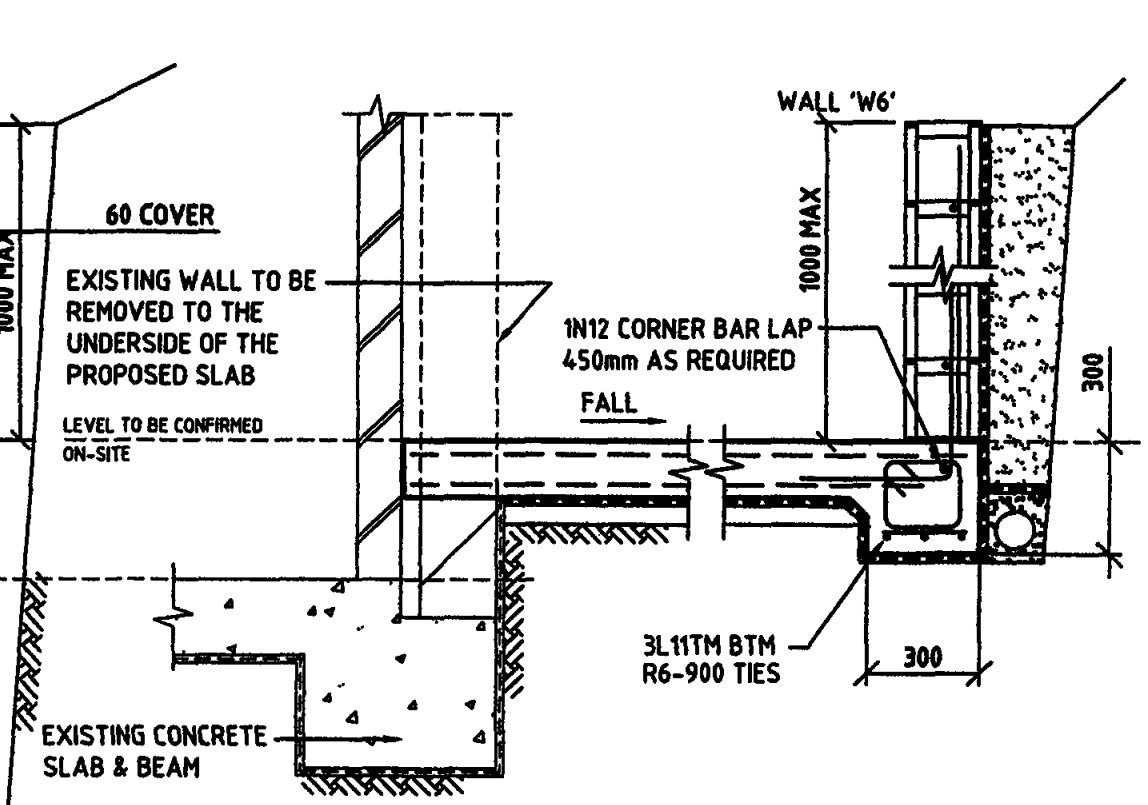

SECTION 3 / S2 00
SCALE 1:20

DENOTES
* DIMENSION TO BE CONFIRMED ON SITE

We have viewed this drawing and endorse that recommendations given in our Report No. 17993-rs1(rt) of (date) 30 August 2005 have been adopted in principle, except for modifications noted or underlined in red which should be adopted

Signed: Associate Date: 12/3/06

For: Jeffery and Katauskas Pty Ltd
115 Wicks Road
Macquarie Park NSW 2113
Telephone: 9888 5000

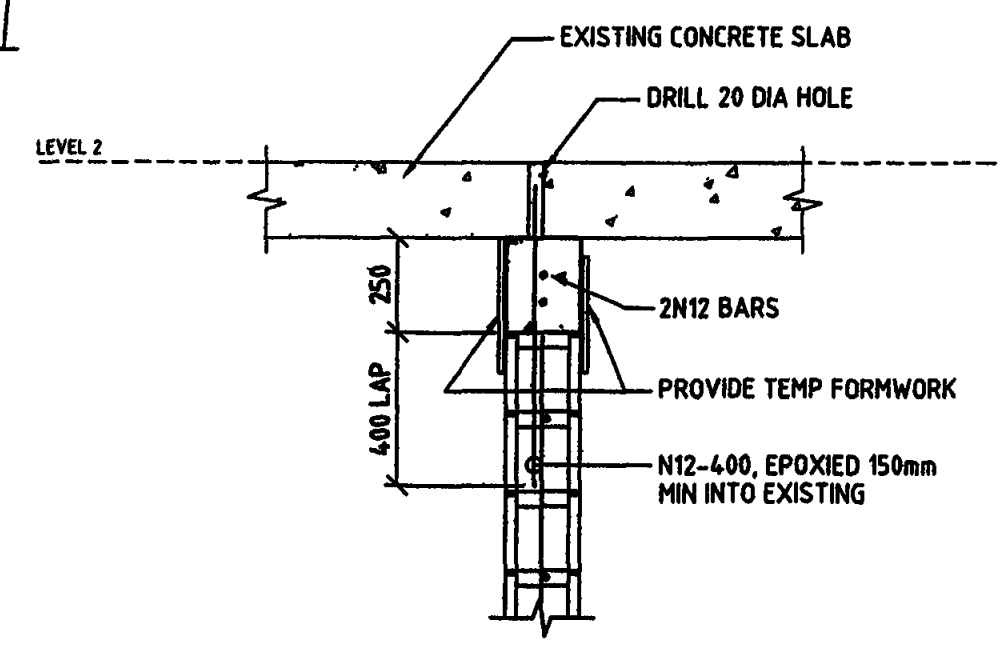

SECTION 4 / S2.00
SCALE 1:20

NOTES
- FOR GENERAL NOTES REFER DRG No 7072-S0 00 & S0 01

The information contained on this drawing has been prepared for the exlusive use of the Client for this project
No liability or responsibility is accepted for use of this information by any third party or for any other project

ISSUE	DESCRIPTION	BY	APR	DATE
A	ISSUED FOR CONSTRUCTION	JC	SW	21.02.08
01	PRELIMINARY - FOR INFORMATION ONLY	JC	SW	05.02.08

ARCHITECT:
GARTNER TROVATO ARCHITECTS
a 12/19 BUNGAN STREET MONA VALE, NSW 2103
p +612 9979 4411
f +612 9979 4422
e GTA@G-T COM.AU

CHARTERED PROFESSIONAL ENGINEER:
SIMON WADDINGTON (BE Hons)
CPEng MIEAust NPER (Structural)
T 02 9400 2986
F 02 9400 2986
M 0414 393 807
E. simonwaddington@optusnet.com.au

PROJECT:
PROPOSED NEW LIFT & GARAGE
at 209 RIVERVIEW ROAD, AVALON
for Mr & Mrs G & T DUFTY

DRAWING TITLE:
LEVEL 2 & 3 DETAILS - SHT 1 of 2

DESIGN: S W	DATE: JAN 2008
DRAWN: J C	SCALE: 1:20
FILENAME: 7072 - S2.01.DWG	
SIGNED:	SIZE A3
DRAWING No: 7072-S2 01	REV A

We have viewed this drawing and endorse that recommendations given in our Report No 17993-N13A1 of (date) 30 August 2005 be been adopted in principle, except for modifications noted or underlined in red which should be adopted

Signed Date 12/3/08

For Jeffery and Katauskas Pty Ltd
115 Wicks Road
Macquarie Park NSW 2113
Telephone 9888 5000

NOTES
FOR GENERAL NOTES REFER DRG No 7072-S0 00 & S0 01

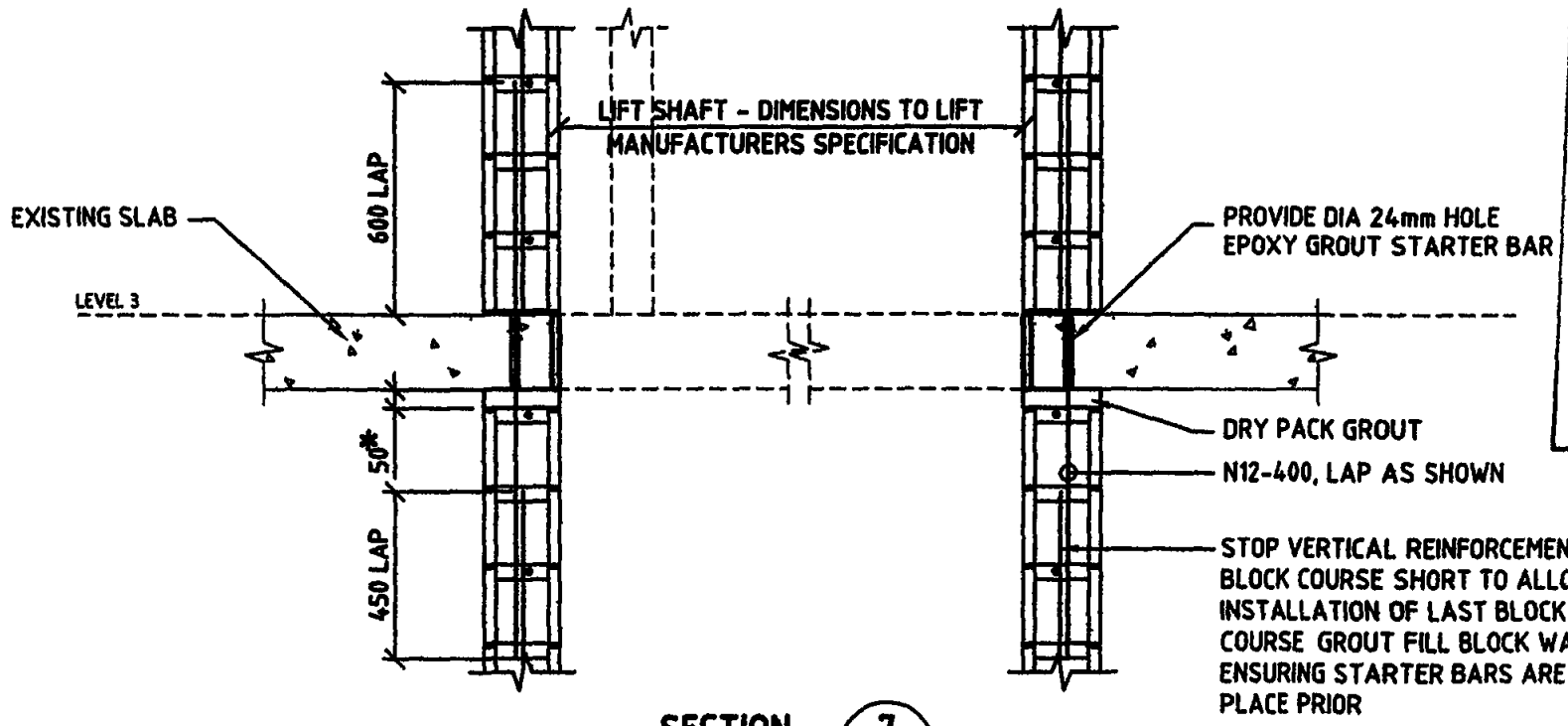

SECTION 7 / S2 00
SCALE 1 20

DENOTES
* DIMENSION TO BE CONFIRMED ON SITE

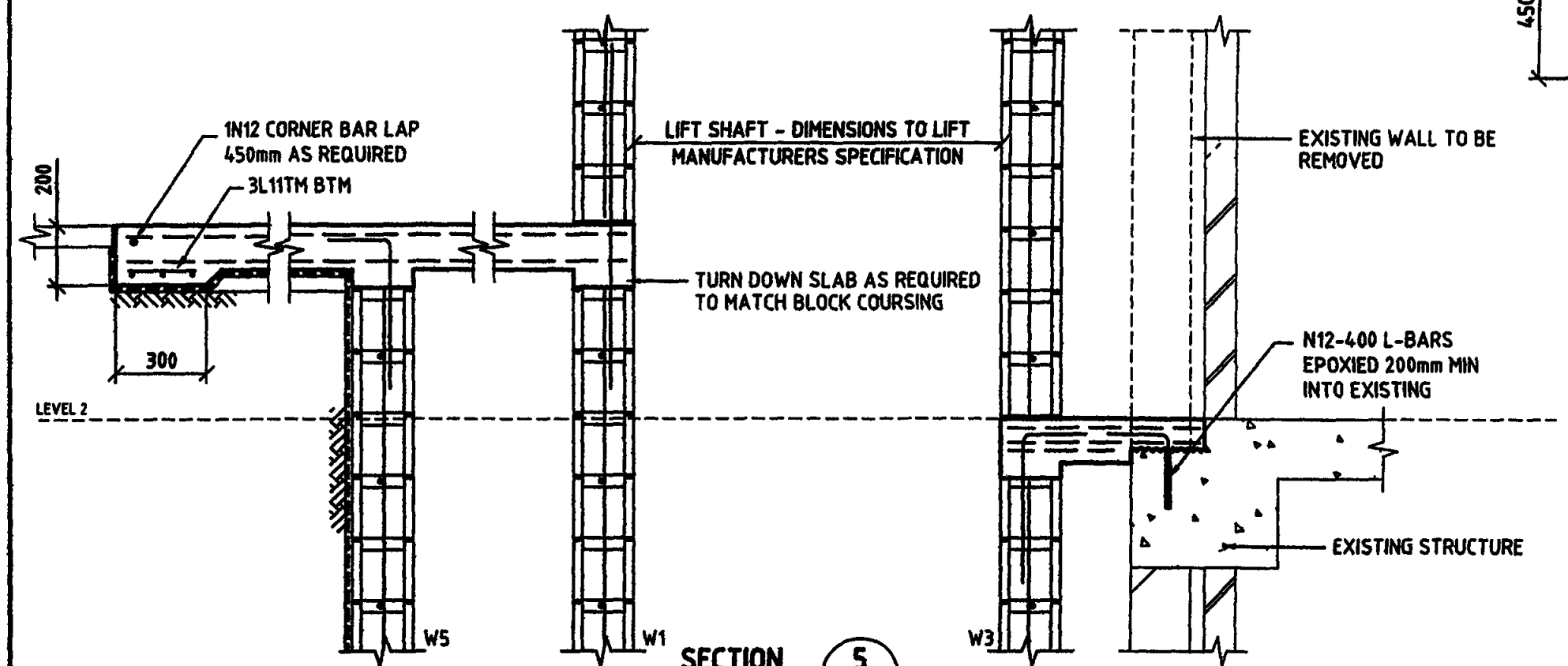

SECTION 5 / S2 00
SCALE 1 20

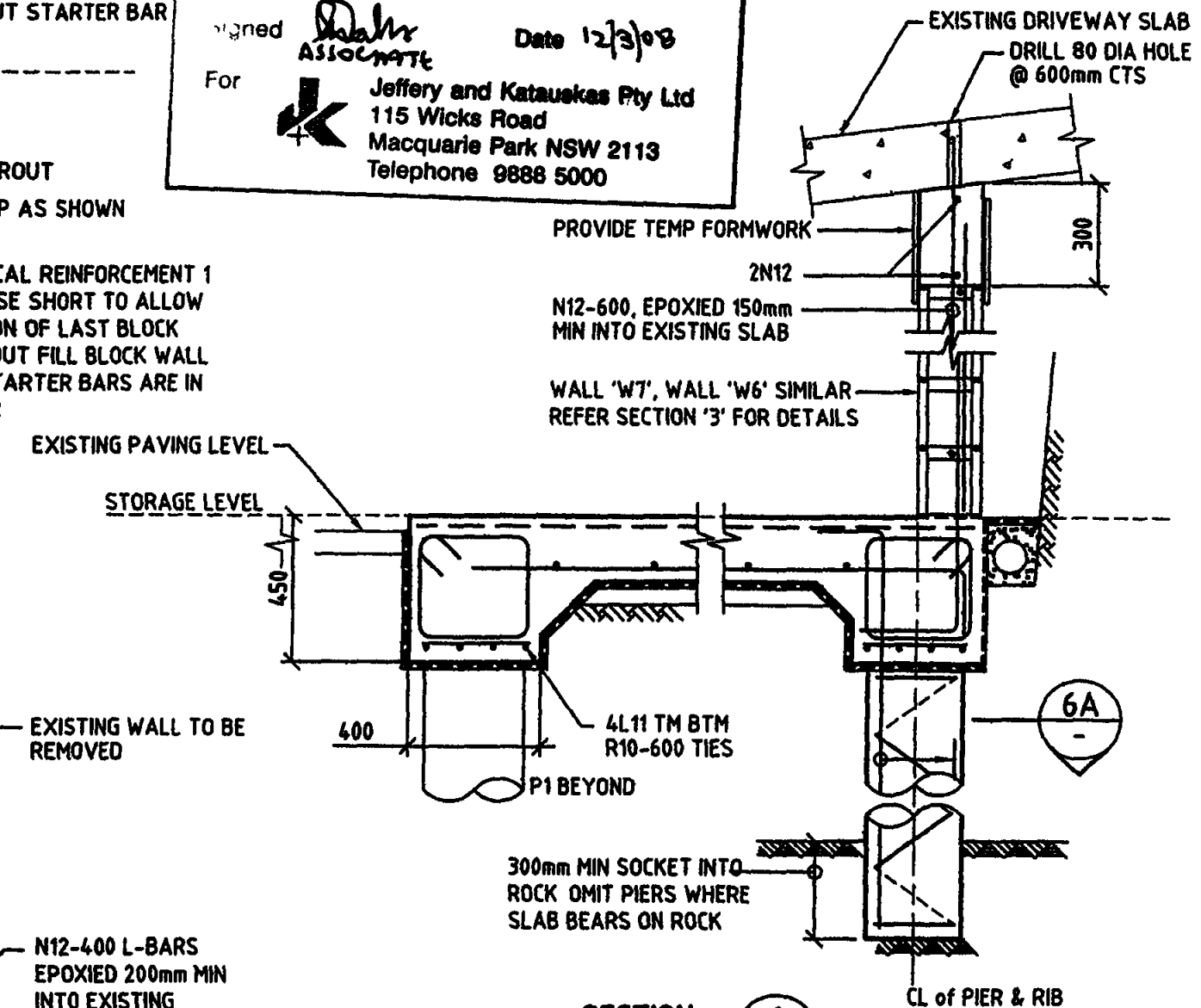

SECTION 6 / S2 00
SCALE 1 20

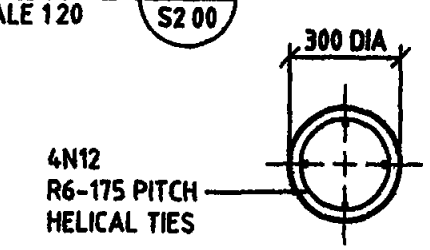

TYPICAL PIER 'P1' DETAILS

SECTION 6A / -
SCALE 1:20

The information contained on this drawing has been prepared for the exlusive use of the Client for this project
No liability or responsibility is accepted for use of this information by any third party or for any other project

ISSUE	DESCRIPTION	BY	APR	DATE
A	ISSUED FOR CONSTRUCTION	JC	SW	21.02.08
01	PRELIMINARY - FOR INFORMATION ONLY	JC	SW	05.02.08

ARCHITECT:
GARTNER TROVATO ARCHITECTS
a 12/19 BUNGAN STREET MONA VALE, NSW 2103
p +612 9979 4411
f +612 9979 4422
e GTA@G-T.COM.AU

CHARTERED PROFESSIONAL ENGINEER:
SIMON WADDINGTON (BE Hons)
CPEng MIEAust NPER (Structural)
T 02 9400 2986
F 02 9400 2986
M 0414 393 807
E. simonwaddington@optusnet.com.au

PROJECT:
PROPOSED NEW LIFT & GARAGE
at. 209 RIVERVIEW ROAD, AVALON
for: Mr & Mrs G & T DUFTY

DRAWING TITLE:
LEVEL 2 & 3 DETAILS - SHT 2 of 2

DESIGN: S W | DATE: JAN 2008
DRAWN: J C | SCALE: 1:20
FILENAME: 7072 - S2.02.DWG
SIGNED
SIZE A3
DRAWING No: 7072-S2.02
REV A

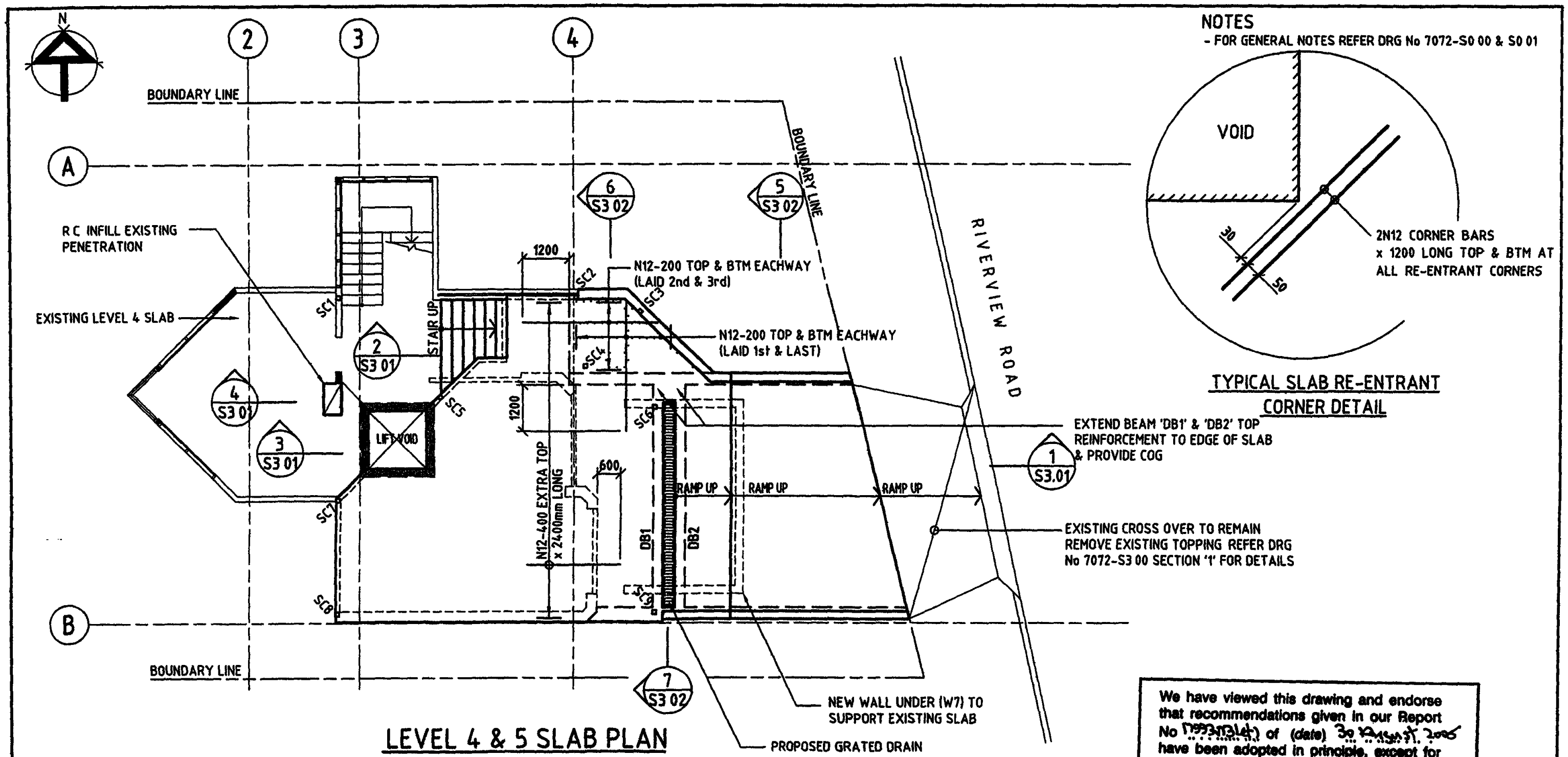

LEVEL 4 & 5 SLAB PLAN

SCALE 1 100

1. ALL SLABS TO BE 150mm THICK THROUGHOUT, UNLESS NOTED OTHERWISE.
2. SLAB TO BE REINFORCED WITH SL82 MESH TOP & N12-300 EACHWAY BOTTOM THROUGHOUT, UNLESS NOTED OTHERWISE, PLUS EXTRA BARS AS SHOWN ON PLAN & SECTIONS.
3. DENOTES

[ ] EXTENT OF SLAB TO BE 200mm THICK

NOTES

- FOR GENERAL NOTES REFER DRG No 7072-S0 00 & S0 01

TYPICAL SLAB RE-ENTRANT CORNER DETAIL

We have viewed this drawing and endorse that recommendations given in our Report No 17993STB(1) of (date) 30 August 2005 have been adopted in principle, except for modifications noted or underlined in red which should be adopted

Signed [signature] Date 12/3/08

For: Jeffery and Katauskas Pty Ltd
115 Wicks Road
Macquarie Park NSW 2113
Telephone 9888 5000

The information contained on this drawing has been prepared for the exclusive use of the Client for this project No liability or responsibility is accepted for use of this information by any third party or for any other project

ISSUE	DESCRIPTION	BY	APR	DATE
A	ISSUED FOR CONSTRUCTION	JC	SW	21.02.08
01	PRELIMINARY - FOR INFORMATION ONLY	JC	SW	05.02.08

ARCHITECT:
GARTNER TROVATO ARCHITECTS
a 12/19 BUNGAN STREET MONA VALE, NSW 2103
p +612 9979 4411
f +612 9979 4422
e GTA@G-T COM.AU

CHARTERED PROFESSIONAL ENGINEER:
SIMON WADDINGTON (BE Hons)
CPEng MIEAust NPER (Structural)
T 02 9400 2986
F 02 9400 2986
M 0414 393 807
E. simonwaddington@optusnet.com.au

PROJECT:
PROPOSED NEW LIFT & GARAGE
at. 209 RIVERVIEW ROAD, AVALON
for. Mr & Mrs G & T DUFTY

DRAWING TITLE:
LEVEL 4 & 5 SLAB PLAN

DESIGN: S W | DATE: JAN 2008
DRAWN: J C. | SCALE: 1:100
FILENAME: 7072 - S3.00 DWG
SIGNED: [signature] | SIZE A3
DRAWING No: 7072-S3.00 | REV A

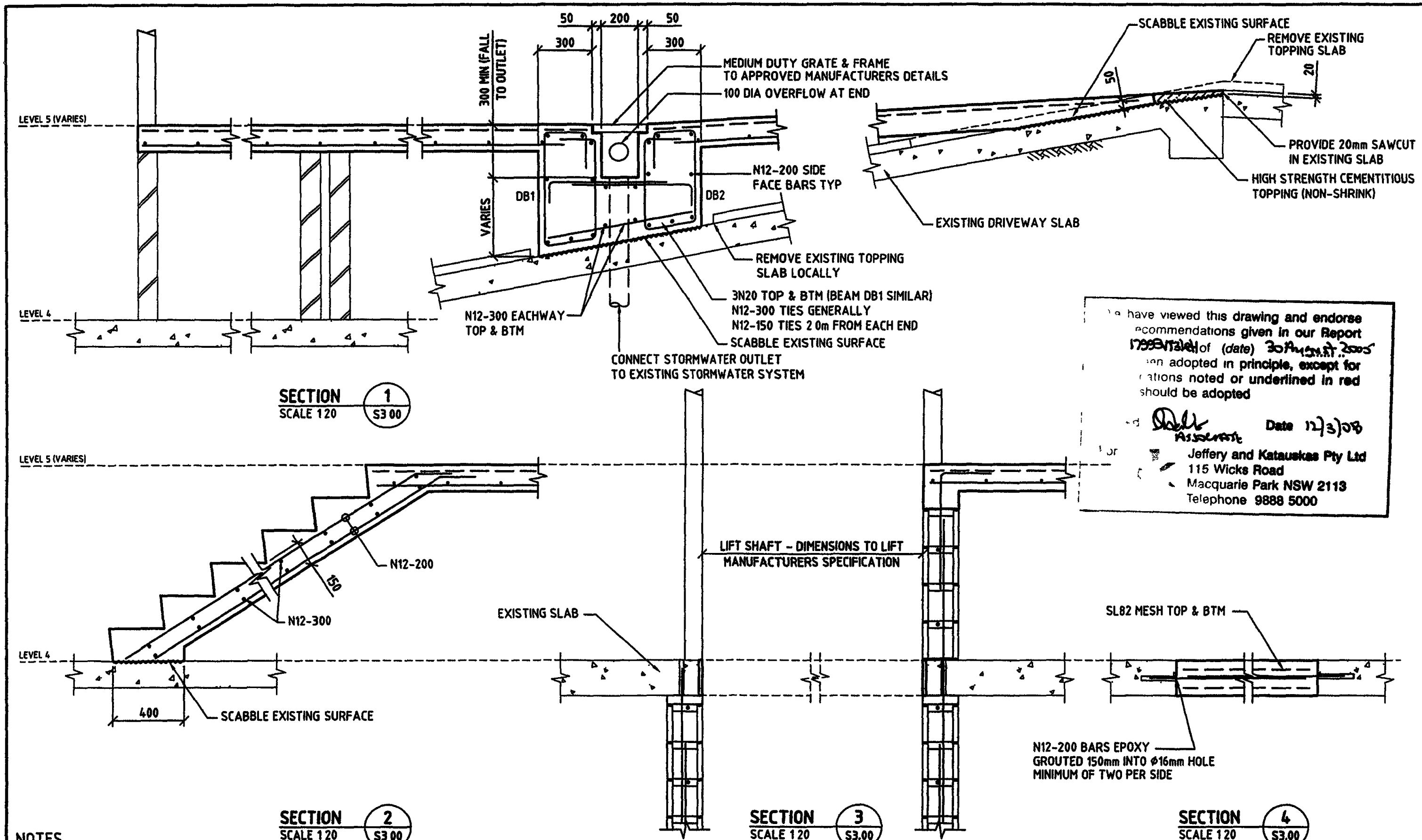

We have viewed this drawing and endorse recommendations given in our Report 17993/17361 of (date) 30th March 2005 when adopted in principle, except for variations noted or underlined in red should be adopted

Signed Assessor Date 12/3/08

Jeffery and Katauskas Pty Ltd
115 Wicks Road
Macquarie Park NSW 2113
Telephone 9888 5000

NOTES

- FOR GENERAL NOTES REFER DRG No 7072-S0 00 & S0 01

The information contained on this drawing has been prepared for the exclusive use of the Client for this project
No liability or responsibility is accepted for use of this information by any third party or for any other project

ISSUE	DESCRIPTION	BY	APR	DATE
A	ISSUED FOR CONSTRUCTION	JC	SW	21.02.08
01	PRELIMINARY - FOR INFORMATION ONLY	JC	SW	05.02.08

ARCHITECT:
GARTNER TROVATO ARCHITECTS
a 12/19 BUNGAN STREET MONA VALE, NSW 2103
p +612 9979 4411
f +612 9979 4422
e GTA@G-T COM.AU

CHARTERED PROFESSIONAL ENGINEER:
SIMON WADDINGTON (BE Hons) CPEng MIEAust NPER (Structural)
T 02 9400 2986
F 02 9400 2986
M 0414 393 807
E. simonwaddington@optusnet.com.au

PROJECT:
PROPOSED NEW LIFT & GARAGE
at 209 RIVERVIEW ROAD, AVALON
for Mr & Mrs G & T DUFTY

DRAWING TITLE:
LEVEL 4 & 5 SLAB DETAILS - SHT 1 of 2

DESIGN: S W	DATE: JAN 2008		
DRAWN: J C	SCALE: 1:10		
FILENAME: 7072 S3.01.DWG			
SIGNED:		SIZE A3	
DRAWING No: 7072-S3.01		REV A	

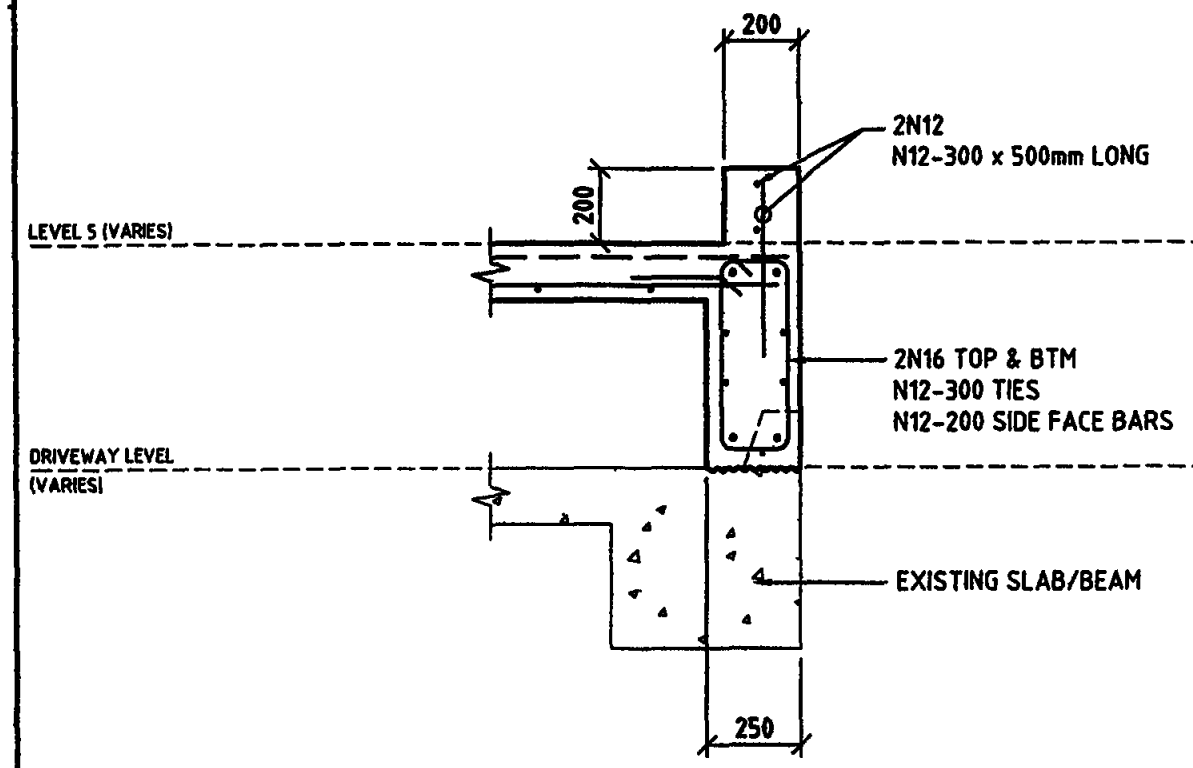

SECTION 5 / S3 00
SCALE 1 20

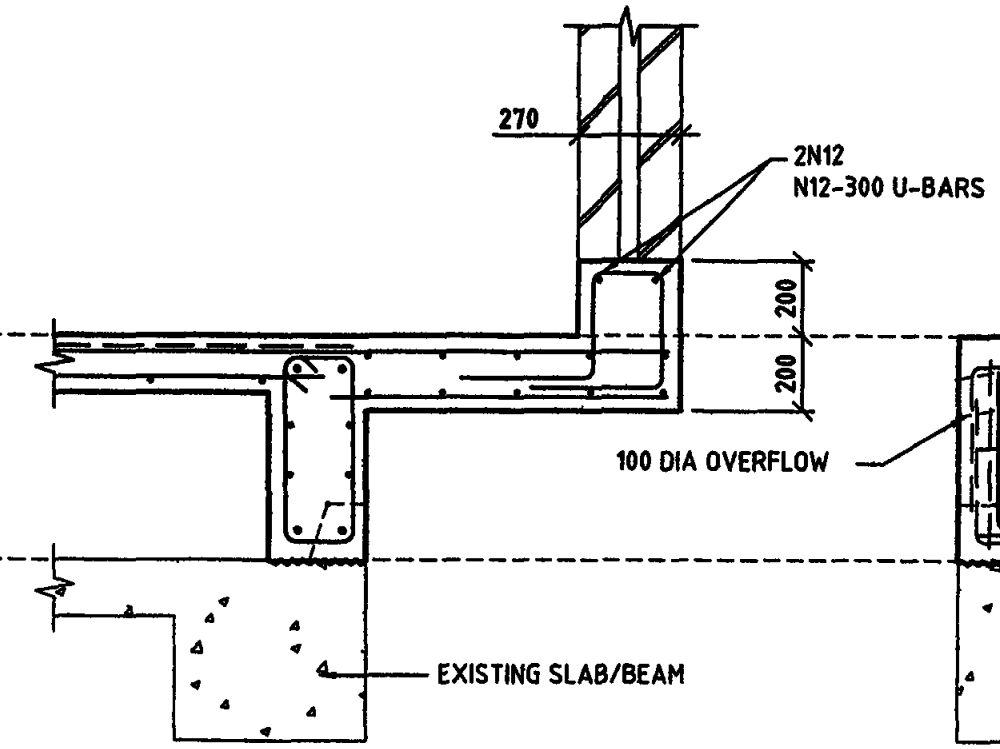

SECTION 6 / S3 00
SCALE 1 20

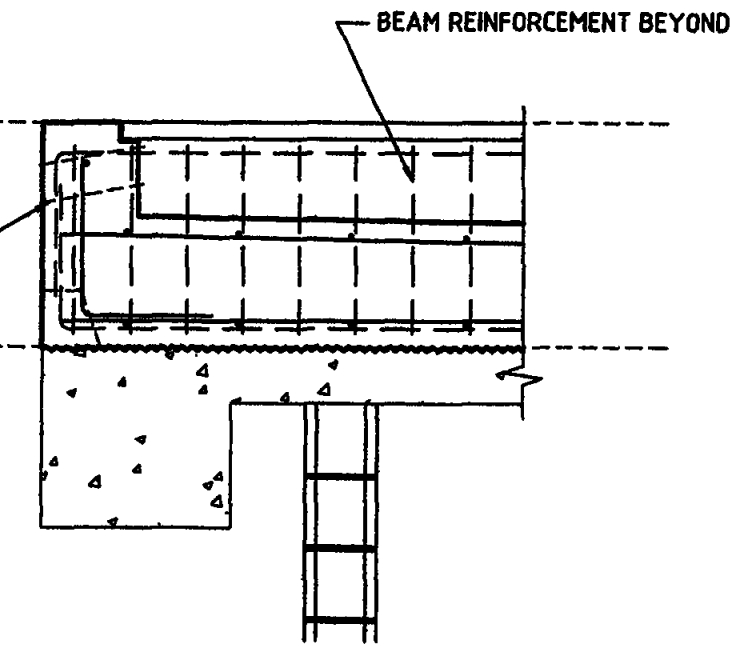

SECTION 7 / S3 00
SCALE 1 20

We have viewed this drawing and endorse that recommendations given in our Report No 17999V13141 of (date) 30 August 2006 have been adopted in principle, except for modifications noted or underlined in red which should be adopted.

Signed: Associate Date 12/3/08

For: Jeffery and Katauskas Pty Ltd
115 Wicks Road
Macquarie Park NSW 2113
Telephone 9888 5000

NOTES

- FOR GENERAL NOTES REFER DRG No 7072-S0 00 & S0 01

The information contained on this drawing has been prepared for the exlusive use of the Client for this project
No liability or responsibility is accepted for use of this information by any third party or for any other project

ISSUE	DESCRIPTION	BY	APR	DATE
A	ISSUED FOR CONSTRUCTION	JC	SW	21.02.08
01	PRELIMINARY - FOR INFORMATION ONLY	JC	SW	05.02.08

ARCHITECT:
GARTNER TROVATO ARCHITECTS
a 12/19 BUNGAN STREET MONA VALE, NSW 2103
p +612 9979 4411
f +612 9979 4422
e GTA@G-T.COM.AU

CHARTERED PROFESSIONAL ENGINEER:
SIMON WADDINGTON (BE Hons) CPEng MIEAust NPER (Structural)
T 02 9400 2986
F 02 9400 2986
M 0414 393 807
E. simonwaddington@optusnet.com.au

PROJECT:
PROPOSED NEW LIFT & GARAGE
at 209 RIVERVIEW ROAD, AVALON
for. Mr & Mrs G & T DUFTY

DRAWING TITLE:
LEVEL 4 & 5 SLAB DETAILS - SHT 2 of 2

DESIGN: S W | DATE: JAN 2008
DRAWN: J C | SCALE: 1:10
FILENAME: 7072 - S3.02.DWG
SIGNED:
SIZE A3
DRAWING No: 7072-S3.02
REV A

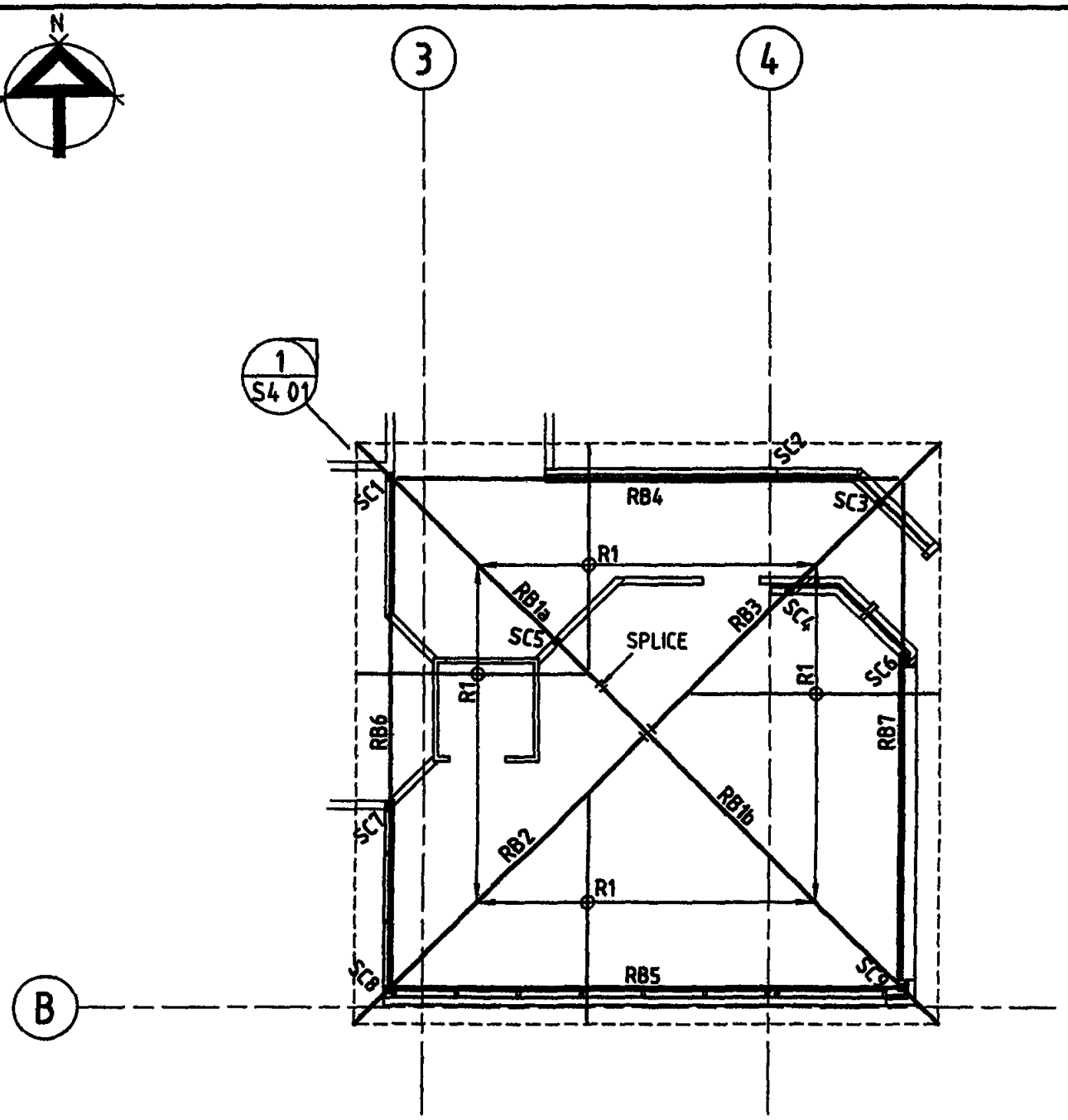

ROOF FRAMING PLAN

SCALE 1 100

NOTES

- FOR GENERAL NOTES REFER DRG No 7072-S0 00 & S0 01

MEMBER SCHEDULE

STEEL COLUMNS

SC1 to SC9 . . .. 89 x 89 x 5 0 SHS

ROOF BEAMS

RB1 to RB3 .... 250 UB 25 7

RB4 to RB7 . ... 150 PFC

RAFTERS

R1 ... . 140 x 45 F7 @ 600mm MAX CTS
PROVIDE DOUBLE RAFTERS AT CROWN RAFTER.

We have viewed this drawing and endorse that recommendations given in our Report No [illegible] of (date) 30 August 2008 have been adopted in principle, except for modifications noted or underlined in red which should be adopted.

Signed [illegible] Date 12/3/09
ASSOCIATE

For: Jeffery and Katauskas Pty Ltd
115 Wicks Road
Macquarie Park NSW 2113
Telephone: 9888 5000

The information contained on this drawing has been prepared for the exclusive use of the Client for this project No liability or responsibility is accepted for use of this information by any third party or for any other project

ISSUE	DESCRIPTION	BY	APR	DATE
A	ISSUED FOR CONSTRUCTION	JC	SW	21.02.08
01	PRELIMINARY - FOR INFORMATION ONLY	JC	SW	05.02.08

ARCHITECT:
GARTNER TROVATO
ARCHITECTS
a 12/19 BUNGAN STREET
MONA VALE, NSW 2103
p +612 9979 4411
f +612 9979 4422
e GTA@G-T COM.AU

CHARTERED PROFESSIONAL ENGINEER:
SIMON WADDINGTON (BE Hons)
CPEng MIEAust NPER (Structural)
T 02 9400 2966
F 02 9400 2966
M. 0414 393 607
E simonwaddington@optusnet.com.au

PROJECT:
PROPOSED NEW LIFT & GARAGE
at 209 RIVERVIEW ROAD, AVALON
for Mr & Mrs G & T DUFTY

DRAWING TITLE:
ROOF FRAMING PLAN

DESIGN: S W | DATE: JAN 2008
DRAWN: J C | SCALE: 1:100
FILENAME: 7072 - S4 00.DWG
SIGNED: [illegible]
SIZE: A3
DRAWING No: 7072-S4.00
REV: A

NOTES

- FOR GENERAL NOTES REFER DRG No 7072-S0 00 & S0 01

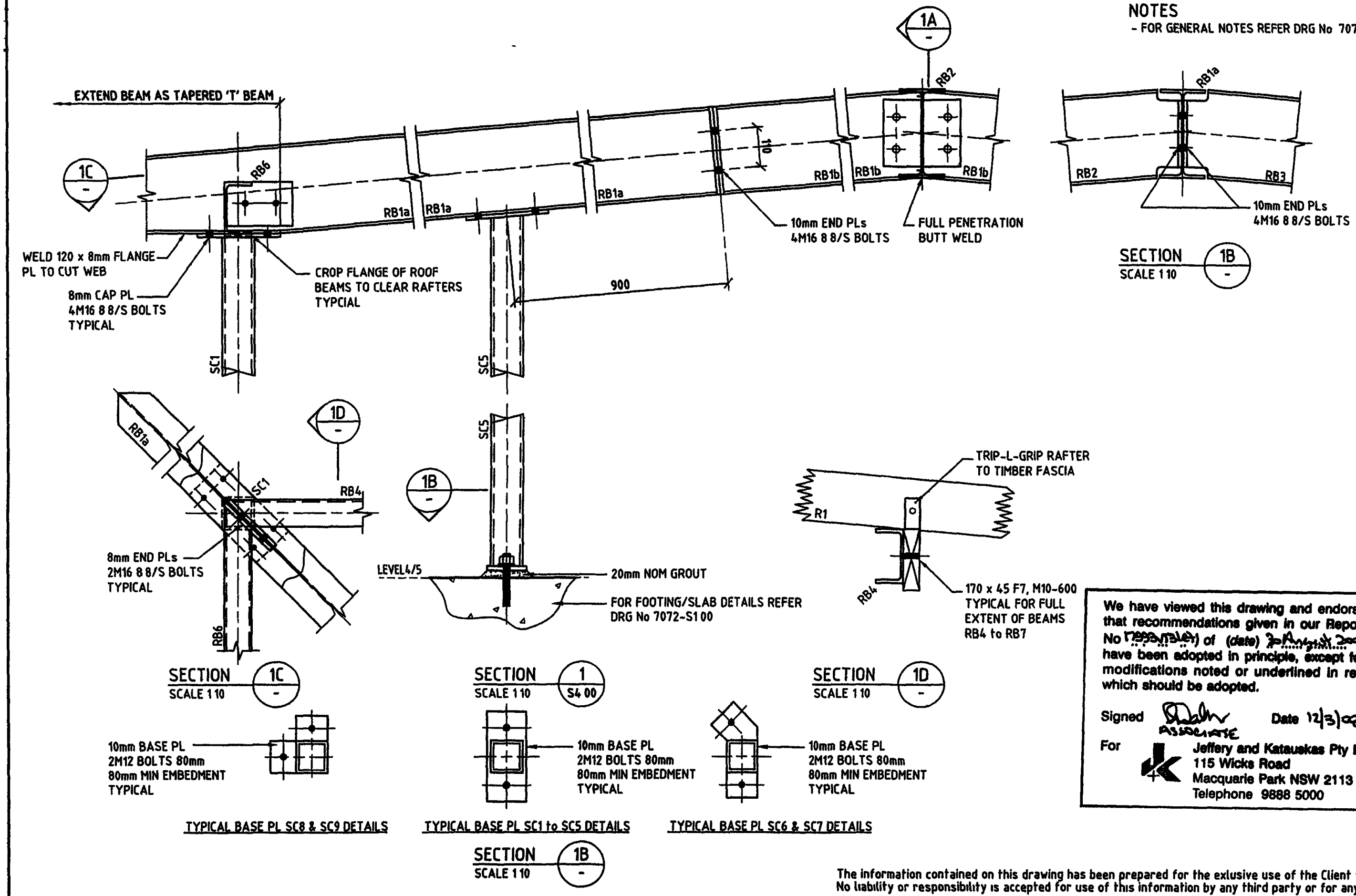

We have viewed this drawing and endorse that recommendations given in our Report No [illegible] of (date) [illegible] have been adopted in principle, except for modifications noted or underlined in red which should be adopted.

Signed [illegible] Date 12/3/03

For Jeffery and Katauskas Pty Ltd
115 Wicks Road
Macquarie Park NSW 2113
Telephone 9888 5000

The information contained on this drawing has been prepared for the exlusive use of the Client for this project
No liability or responsibility is accepted for use of this information by any third party or for any other project

ISSUE	DESCRIPTION	BY	APR	DATE
A	ISSUED FOR CONSTRUCTION	JC	SW	21.02.08
01	PRELIMINARY - FOR INFORMATION ONLY	JC	SW	05.02.08

ARCHITECT:
GARTNER TROVATO ARCHITECTS
a 12/19 BUNGAN STREET MONA VALE, NSW 2103
p +612 9979 4411
f +612 9979 4422
e GTA@G-T COM.AU

CHARTERED PROFESSIONAL ENGINEER:
SIMON WADDINGTON (BE Hons) CPEng MIEAust NPER (Structural)
T 02 9400 2986
F 02 9400 2986
M 0414 393 807
E simonwaddington@optusnet.com.au

PROJECT:
PROPOSED NEW LIFT & GARAGE
at 209 RIVERVIEW ROAD, AVALON
for Mr & Mrs G & T DUFTY

DRAWING TITLE:
ROOF FRAMING DETAILS

DESIGN: S W.	DATE: JAN 2008
DRAWN: J C	SCALE: 1:10
FILENAME: 7072 - S4.01.DWG	
SIGNED:	SIZE A3
DRAWING No: 7072-S4.01	REV A